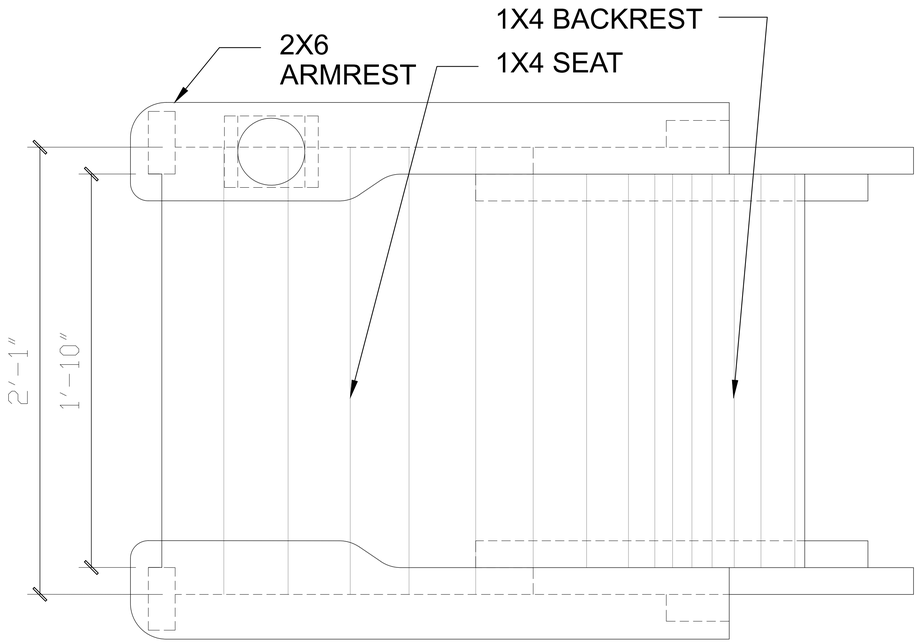

3 CHAIR PLAN

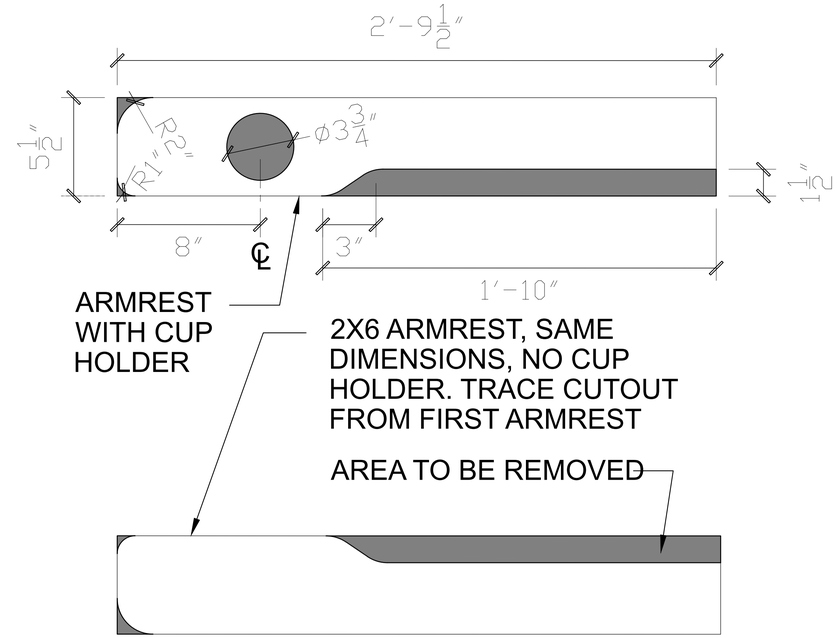

4 CHAIR ARMRESTS

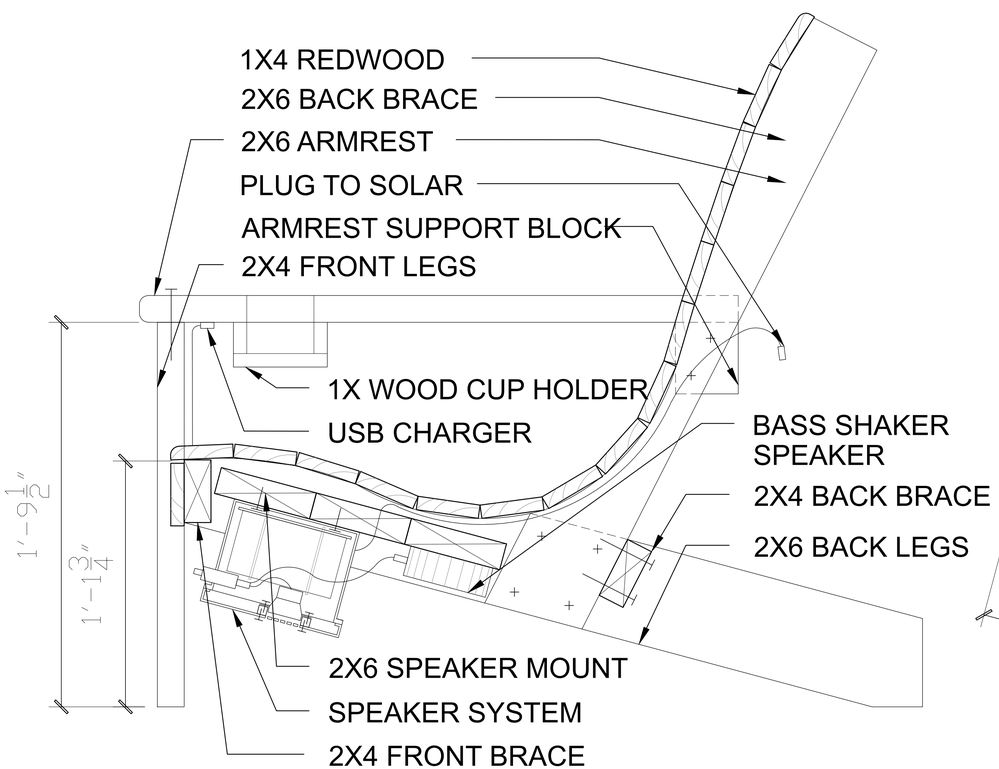

1 CHAIR SECTION

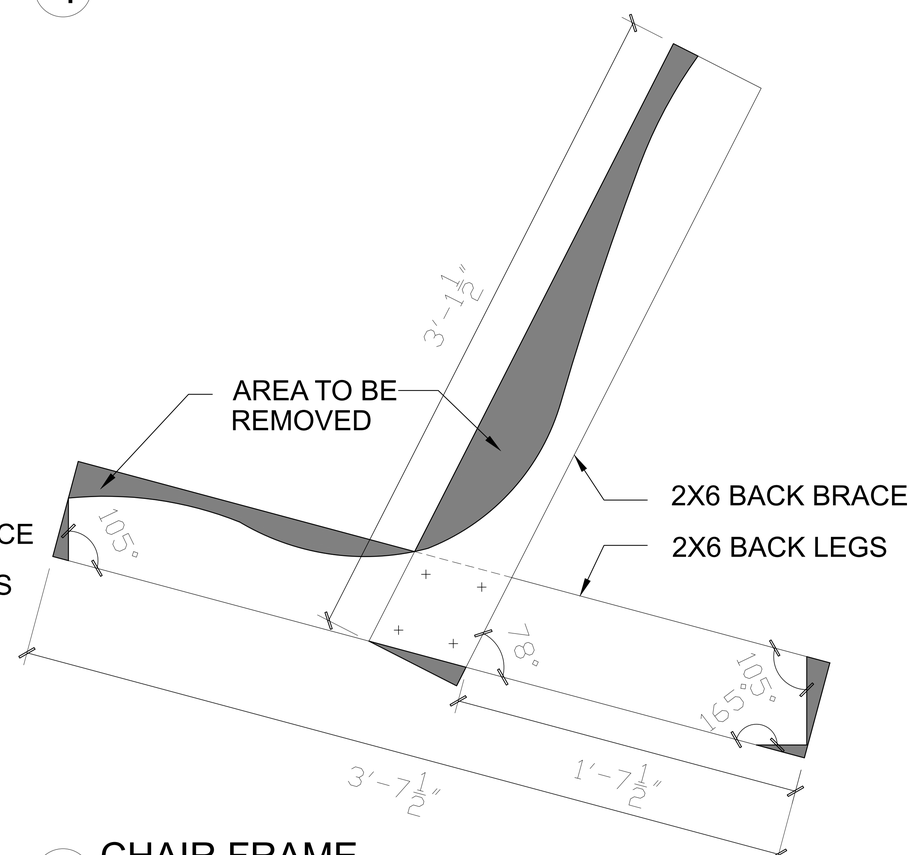

2 CHAIR FRAME

BOOM CHAIR

ARCHITECTURE, LANDSCAPE, INTERIOR DESIGN

DESIGNER:
DANNY SCHAPKER

PLAN FOR:

AUTODESK INSTRUCTABLES

CHAIR CONTEST

ISSUES AND REVISIONS

NO.	DATE	ISSUES
1	03.01.2026	SUBMISSION
-		
-		
-		
-		
-		
-		
-		
-		
-		
-		
-		
-		
-		

ALL DRAWINGS
SCALE 3" = 1'-0"

0" 3" 9" 21"