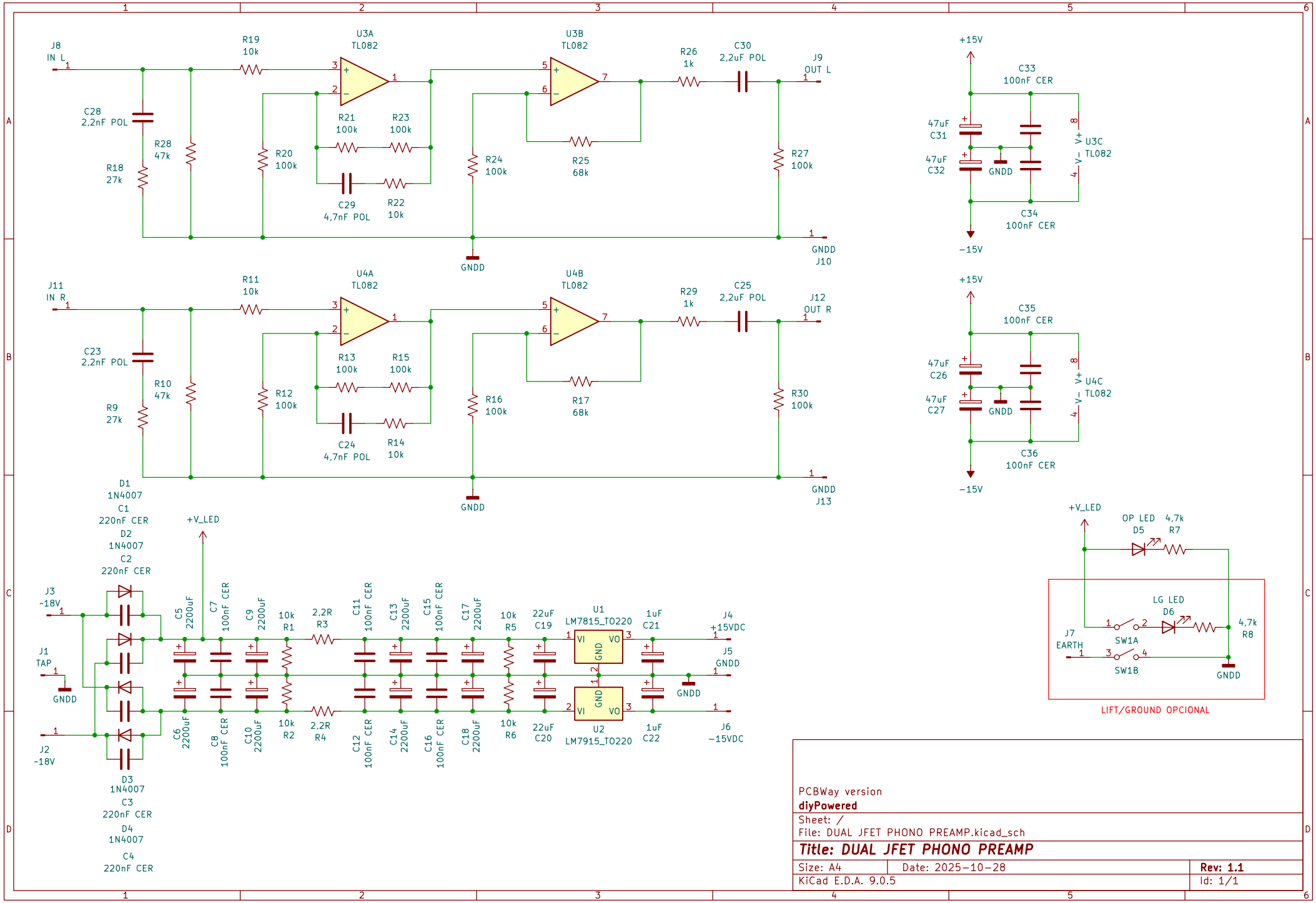

PCBWay version
diyPowered

Sheet: /
File: DUAL JFET PHONO PREAMP.kicad_sch

Title: DUAL JFET PHONO PREAMP

Size: A4	Date: 2025-10-28	**Rev: 1.1**
KiCad E.D.A. 9.0.5		Id: 1/1