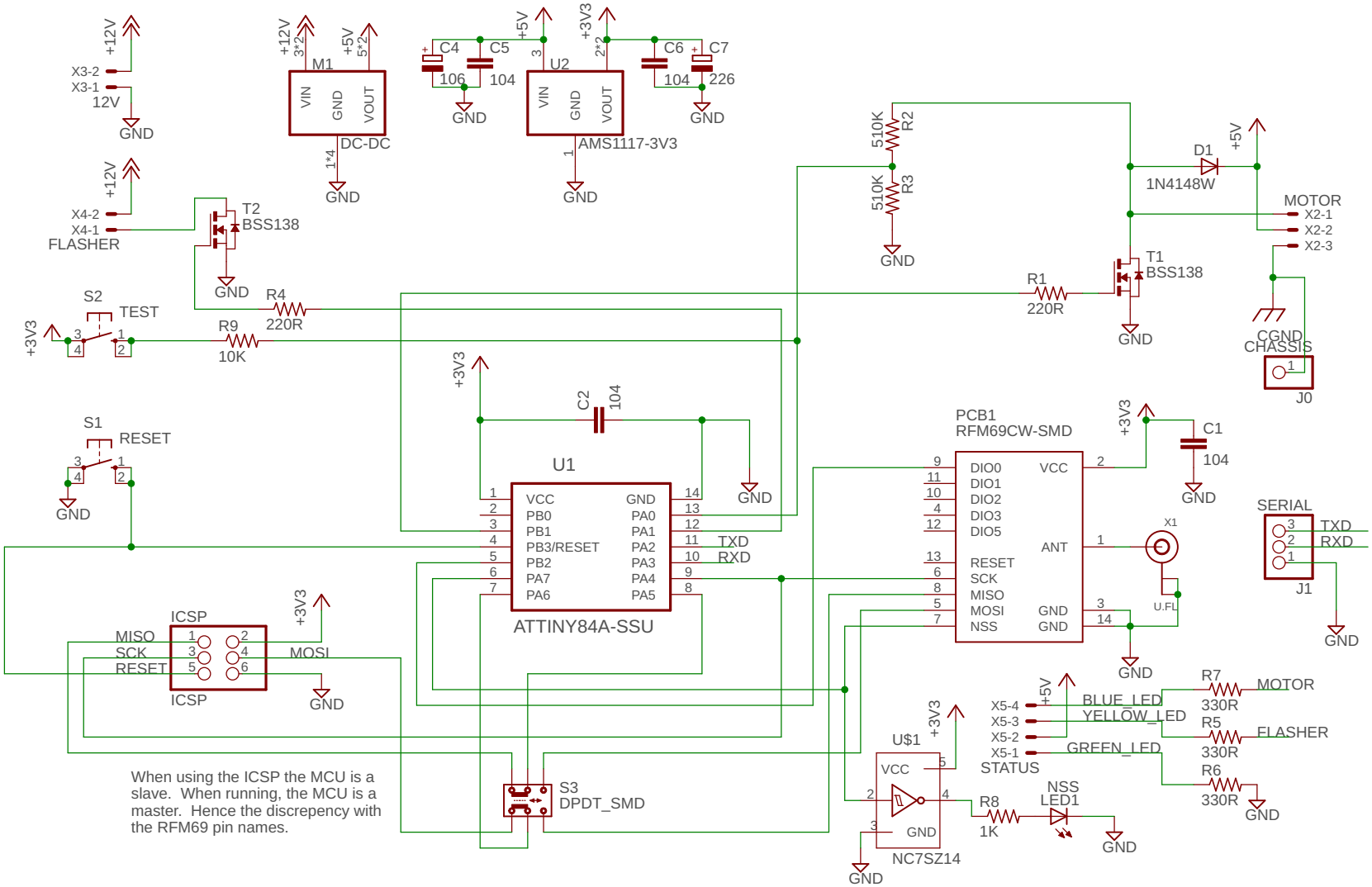
+12V
X3-2
X3-1
12V
GND
M1
DC-DC
VIN
GND
VOUT
+12V 3*2
+5V 5*2
1*4
C4 106
C5 104
+5V
U2
AMS1117-3V3
+3V3 2*2
C6 104
C7 226
X4-2
X4-1
FLASHER
T2
BSS138
R4
220R
S2
TEST
R9
10K
S1
RESET
C2 104
U1
ATTINY84A-SSU
VCC
PB0
PB1
PB3/RESET
PB2
PA7
PA6
PA0
PA1
PA2
PA3
PA4
PA5
TXD
RXD
ICSP
MISO
SCK
RESET
MOSI
S3
DPDT_SMD
When using the ICSP the MCU is a slave. When running, the MCU is a master. Hence the discrepency with the RFM69 pin names.
510K R2
510K R3
D1
1N4148W
MOTOR
X2-1
X2-2
X2-3
T1
BSS138
R1
220R
CGND
CHASSIS
J0
PCB1
RFM69CW-SMD
DIO0
DIO1
DIO2
DIO3
DIO5
RESET
SCK
MISO
MOSI
NSS
VCC
ANT
GND
C1 104
X1
U.FL
SERIAL
J1
U$1
NC7SZ14
R8
1K
NSS
LED1
X5-4
X5-3
X5-2
X5-1
STATUS
BLUE_LED
YELLOW_LED
GREEN_LED
R7
330R
R5
330R
R6
330R