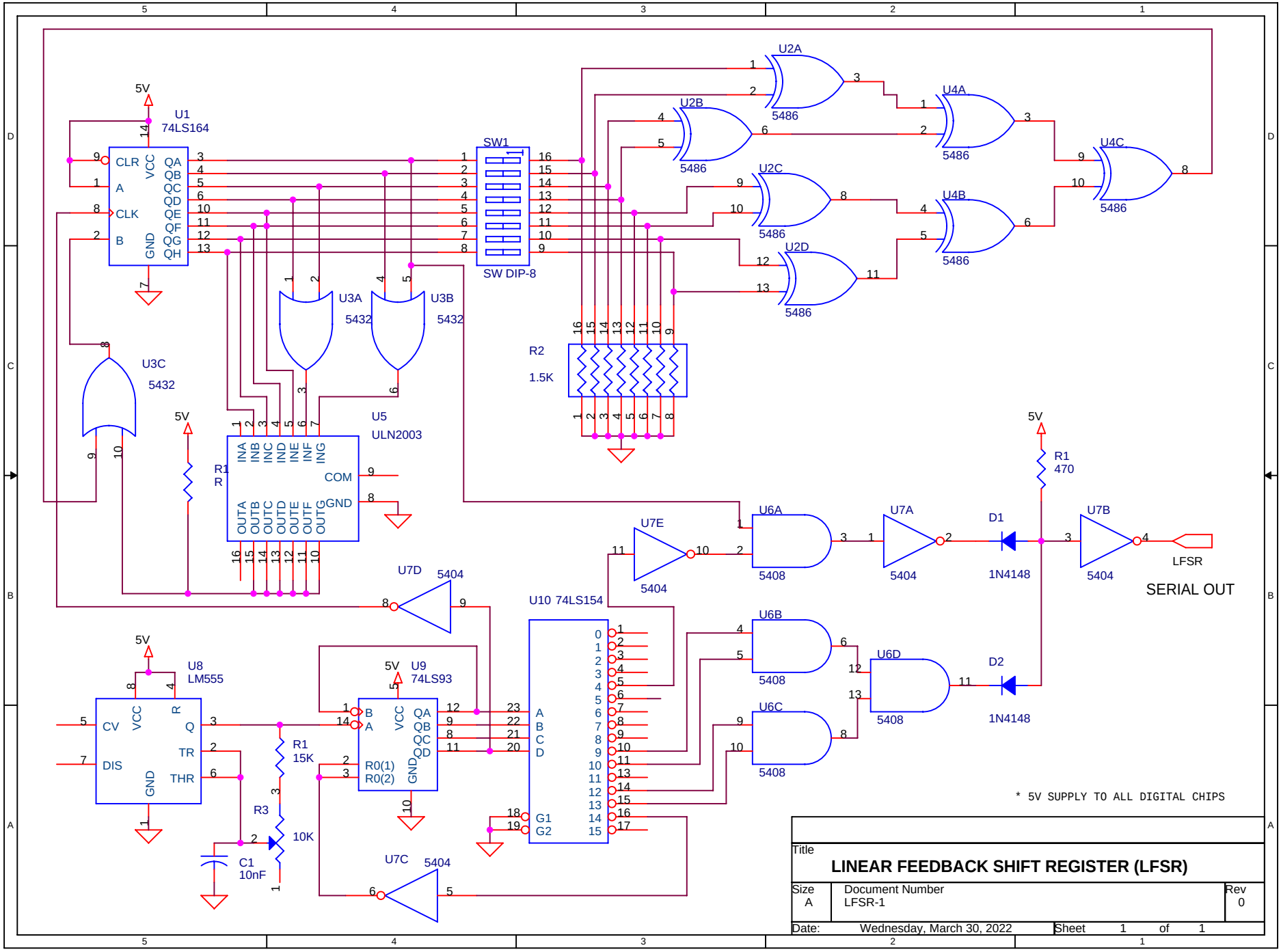
U1
74LS164
CLR
A
CLK
B
VCC
GND
QA
QB
QC
QD
QE
QF
QG
QH
5V
SW1
SW DIP-8
U2A
U2B
U2C
U2D
5486
U4A
U4B
U4C
U3A
U3B
U3C
5432
R2
1.5K
U5
ULN2003
INA
INB
INC
IND
INE
INF
ING
COM
GND
OUTA
OUTB
OUTC
OUTD
OUTE
OUTF
OUTG
R1
R
U7E
5404
U6A
5408
U7A
D1
1N4148
R1
470
U7B
LFSR
SERIAL OUT
U7D
U10 74LS154
U6B
U6C
U6D
D2
U8
LM555
CV
DIS
TR
THR
Q
U9
74LS93
R0(1)
R0(2)
R1
15K
R3
10K
C1
10nF
U7C
G1
G2
* 5V SUPPLY TO ALL DIGITAL CHIPS
Title
LINEAR FEEDBACK SHIFT REGISTER (LFSR)
Size
A
Document Number
LFSR-1
Rev
0
Date:
Wednesday, March 30, 2022
Sheet
1
of
1