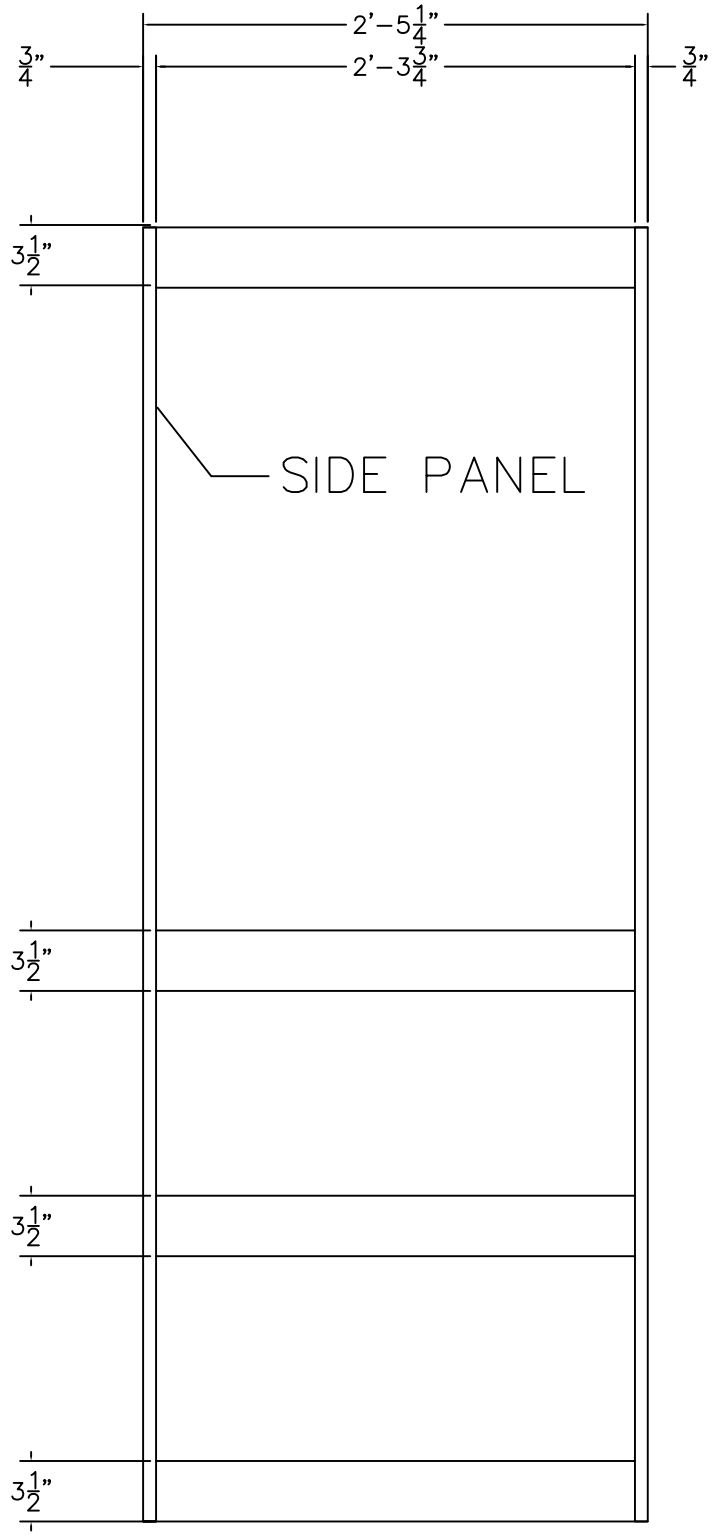

FRONT

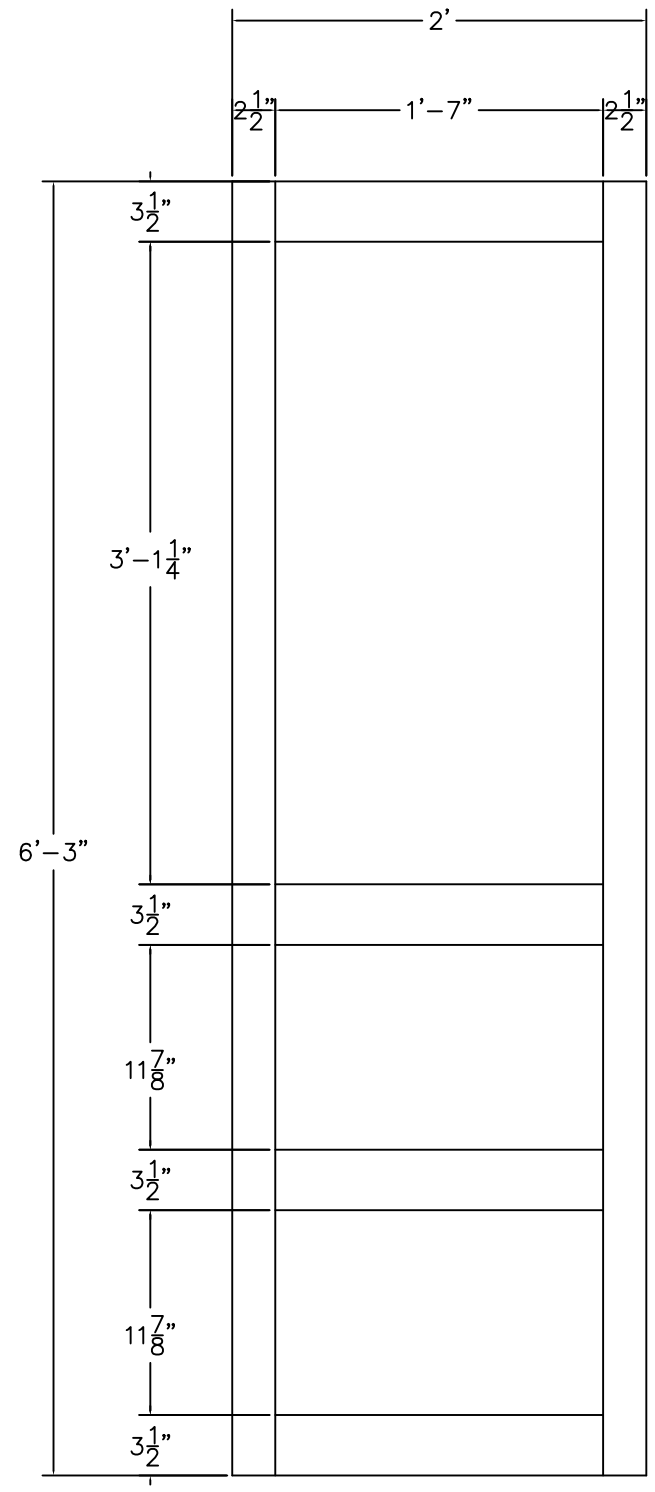

SIDE

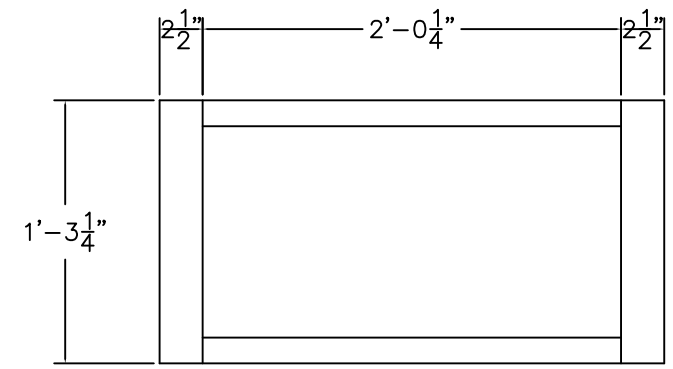

MIDDLE FRONT DOOR

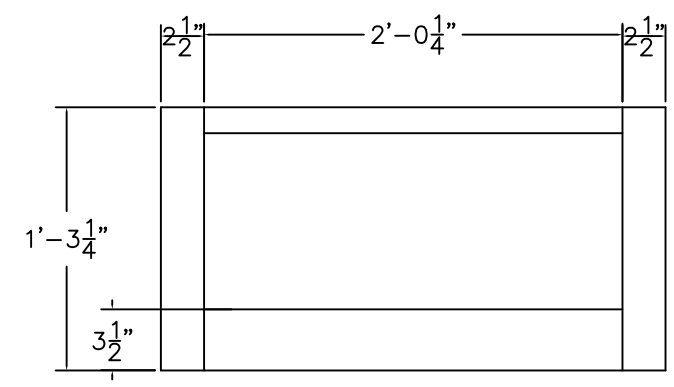

LOWER FRONT DOOR

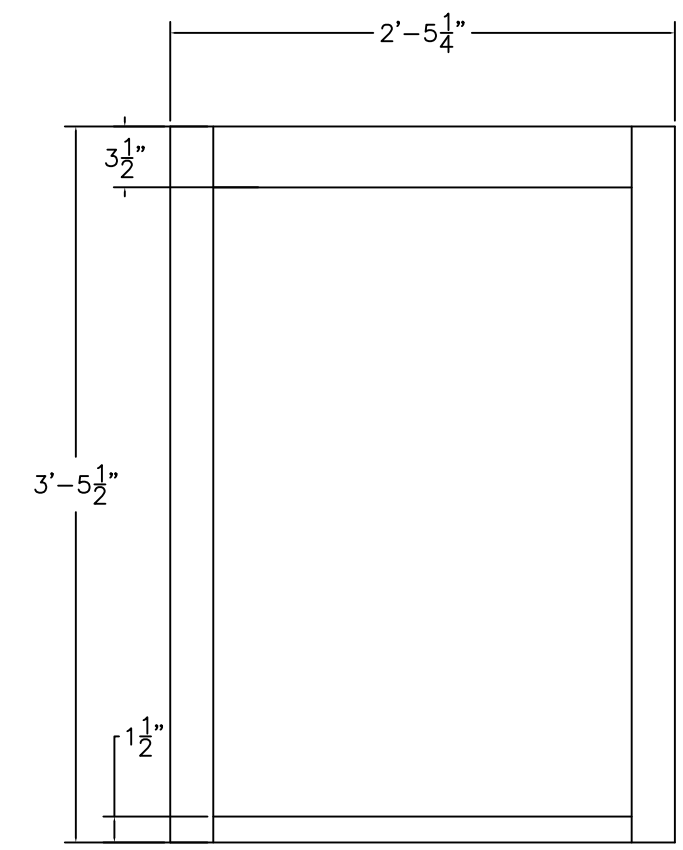

UPPER FRONT DOOR

MATERIAL – POPLAR ($\frac{3}{4}$") THICHKNESS

TOLERANCES	
DO NOT SCALE DRAWING	
±1/16"	FRACTIONAL DIMENSIONS UNLESS OTHERWISE SPECIFIED
±1/16"	FRACTIONAL ACCUMULATIVE DIMENSIONS CANNOT EXCEED OVER-ALL DIMENSIONS
±0.010"	ALLOWED ON DIMENSION CONTROLLING FINISHED SURFACES UNLESS OTHERWISE SPECIFIED
±1/60°	ANGULAR TOLERANCE UNLESS OTHERWISE SPECIFIED

REV	DATE	DESCRIPTION	BY	CHKD BY	ITEM NO.

WEB: WWW.GUARNERO.COM

DRAWING TITLE: CABINET DIMENSIONS

CUSTOMER: MADAMK

DRAWING: MADAMK_CABINET.DWG

PROJECT ENGINEER: JOHN GUARNERO | DRAWN BY: JOHN GUARNERO | PROJECT APPROVAL: JOHN GUARNERO

SCALE | CHECKED BY: JOHN GUARNERO | DATE: OCTOBER 28, 2014 | DRAWING STATUS: AS-BUILT

DRAWING SIZE: D | JOB NUMBER: MADAMK | DRAWING NUMBER | SHEET 1 OF 1 | REVISION: A