ARMCHAIR_CUTTING LAYOUT_TROTEC

Scale 1 : 10

Metric Units: mm

Qunatity : 1

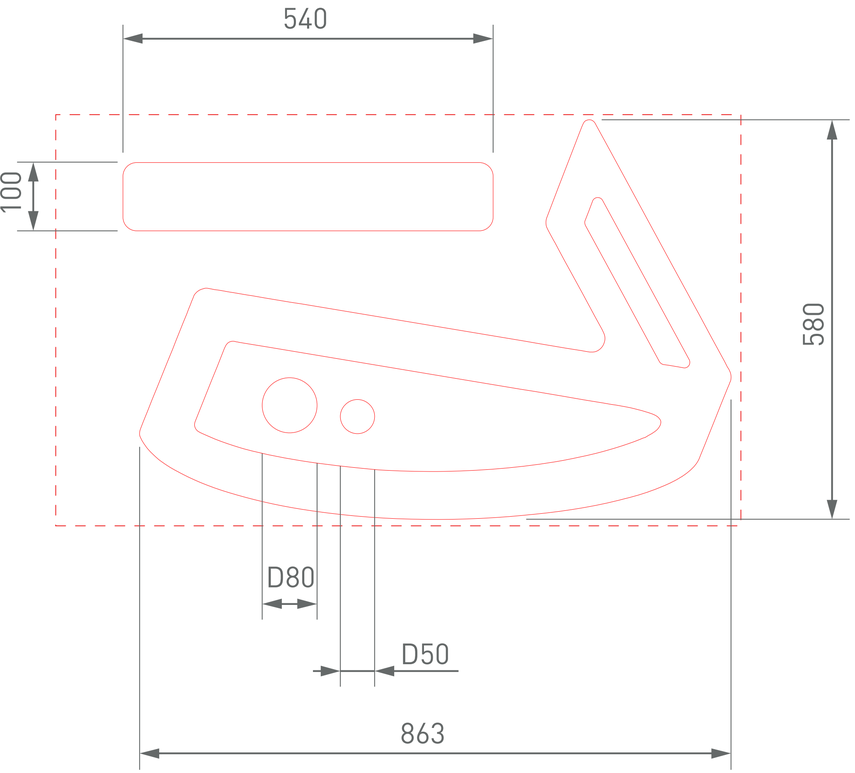

Qunatity : 1

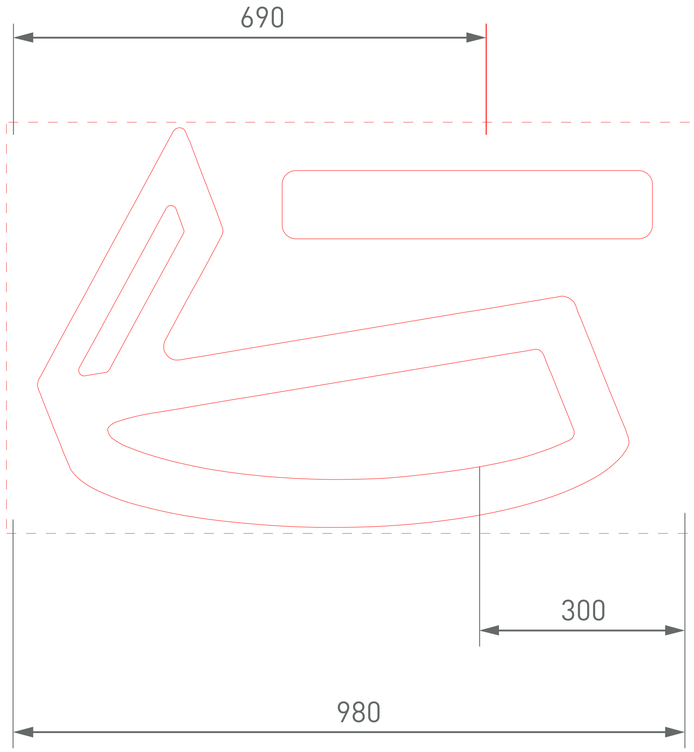

Qunatity : 1

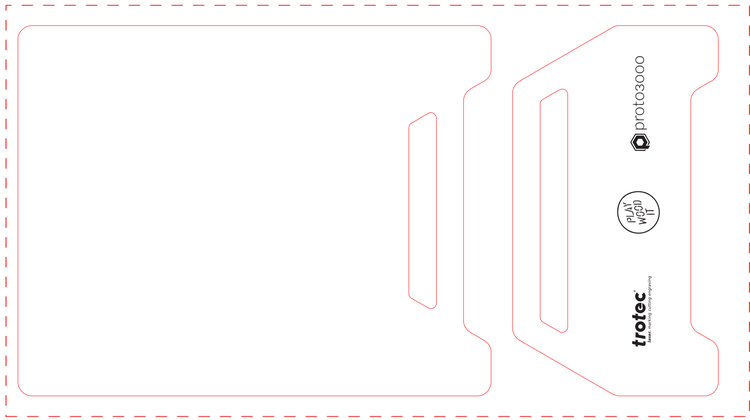

WORK AREA

CUT

ENGRAVE