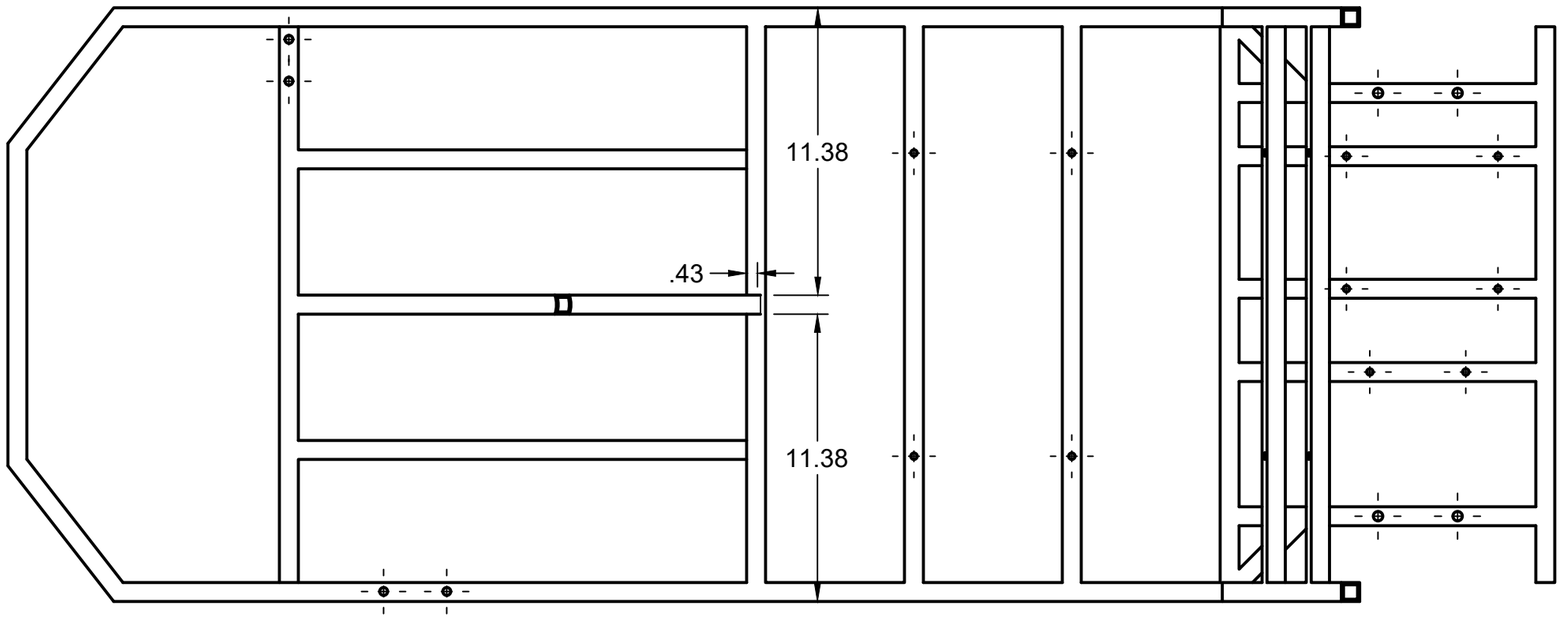
11.38
.43
11.38

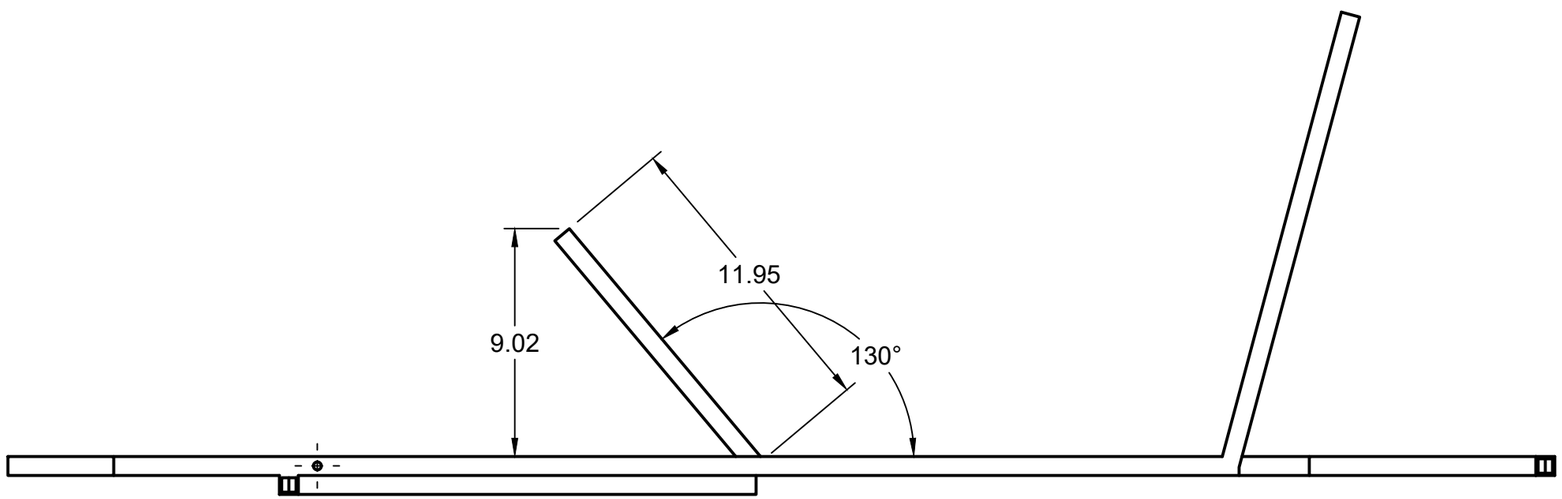
11.95
9.02
130°