Power Supply

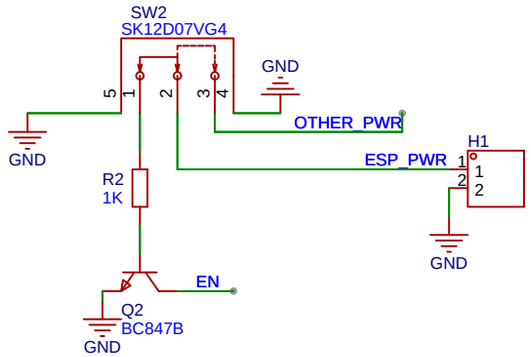

Controller

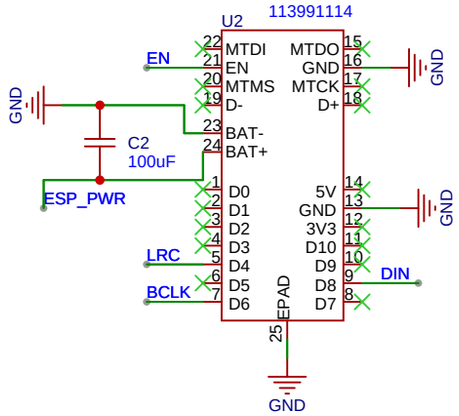

Amplifier + Speaker

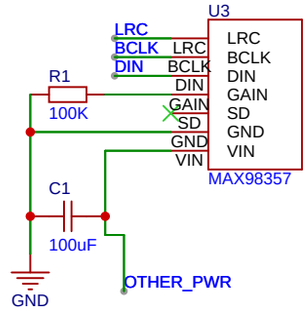

Schematic	Schematic1	Create at	2026-04-03
		Update at	2026-04-13
Board	Board1	Page	P1
Drawn	AI_PIN		
Reviewed			
		Version	Size	Page 1 Total 1
EasyEDA		V1.0	A4	EasyEDA.com