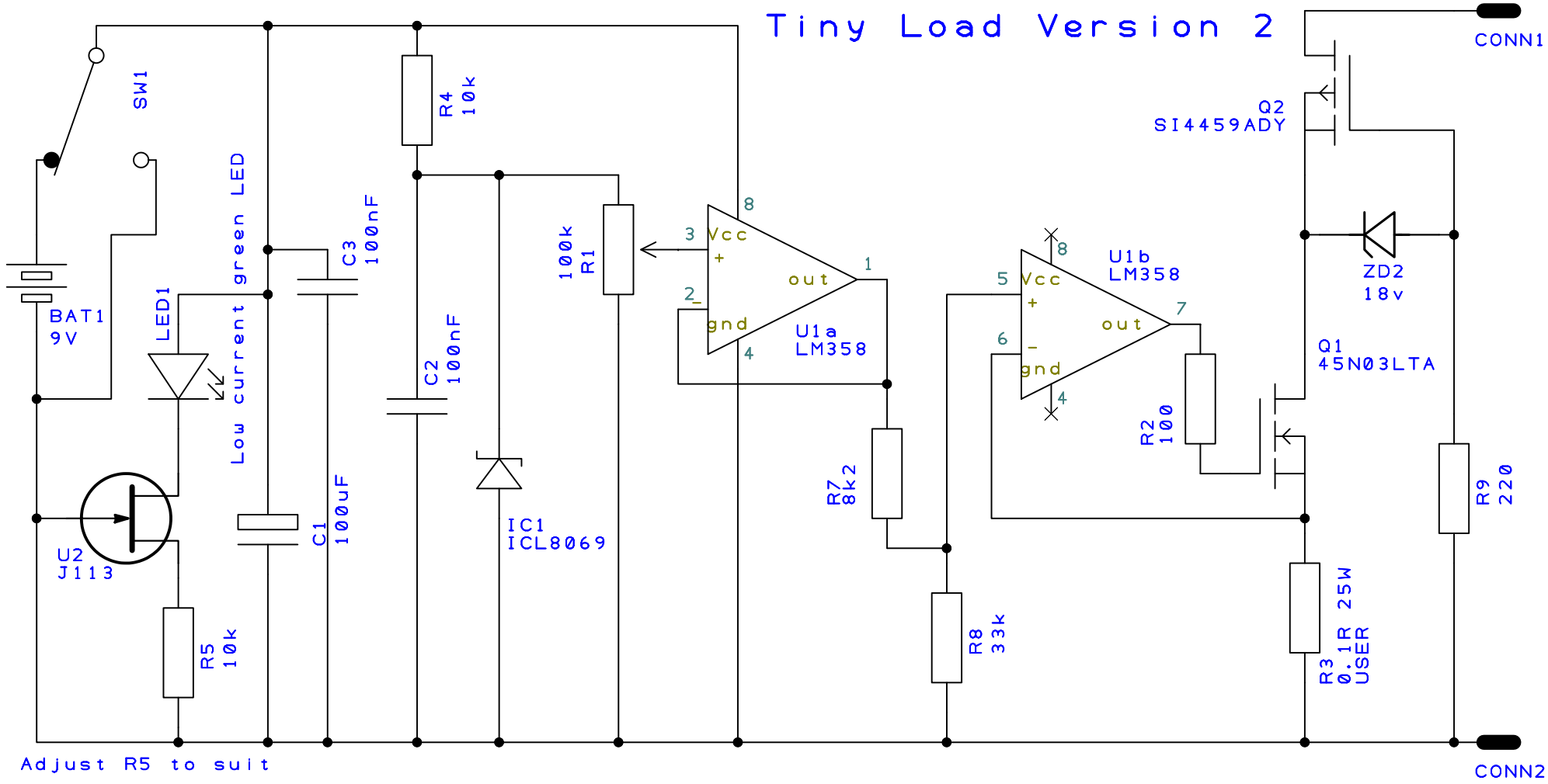
Tiny Load Version 2
CONN1
CONN2
SW1
BAT1
9V
LED1
Low current green LED
U2
J113
R5
10k
C1
100uF
C3
100nF
R4
10k
C2
100nF
IC1
ICL8069
100k
R1
Vcc
out
gnd
U1a
LM358
R7
8k2
R8
33k
U1b
LM358
R2
100
Q2
SI4459ADY
ZD2
18v
Q1
45N03LTA
R3
0.1R 25W
USER
R9
220
Adjust R5 to suit