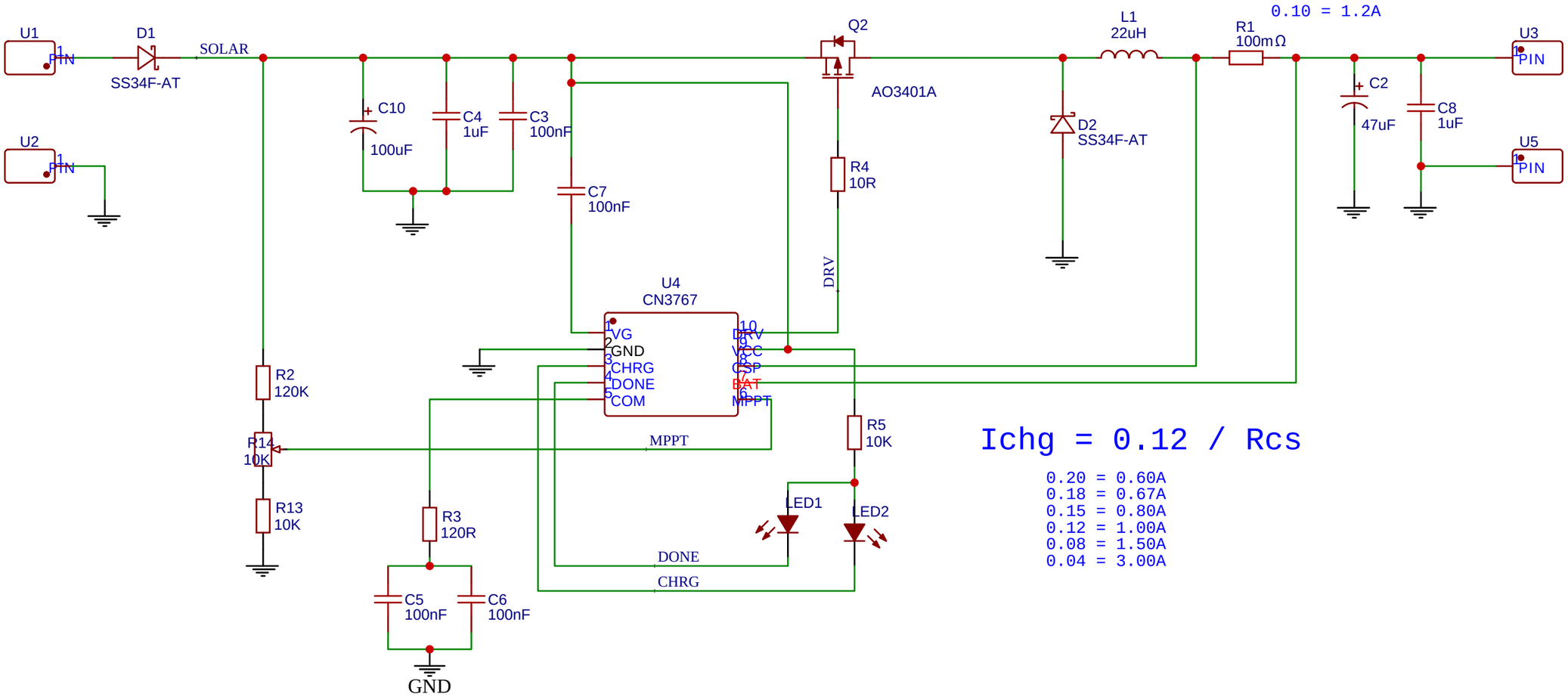

Ichg = 0.12 / Rcs

0.20 = 0.60A
0.18 = 0.67A
0.15 = 0.80A
0.12 = 1.00A
0.08 = 1.50A
0.04 = 3.00A

TITLE: Sheet_1	REV: 1.0
EasyEDA Company: Your Company	Sheet: 1/1
Date: 2025-07-18 Drawn By: sagar saini	