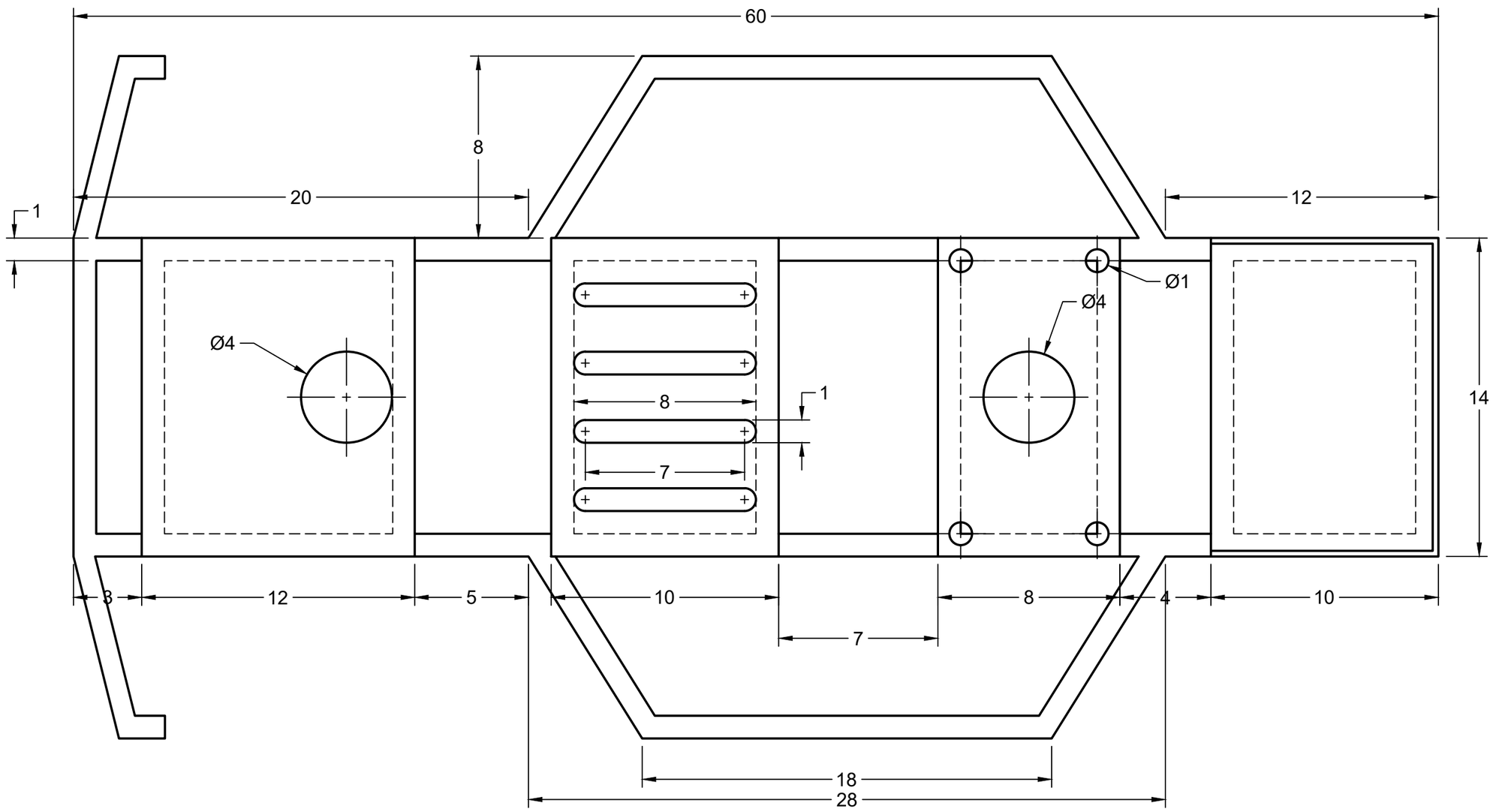

	PROJECT Admin Project			
	TITLE Technical drawing			
APPROVED	SIZE	CODE	DWG NO	REV
CHECKED	B			
DRAWN Henry Schalwitz 6/2/2026	SCALE 1:5	WEIGHT		SHEET 1/1