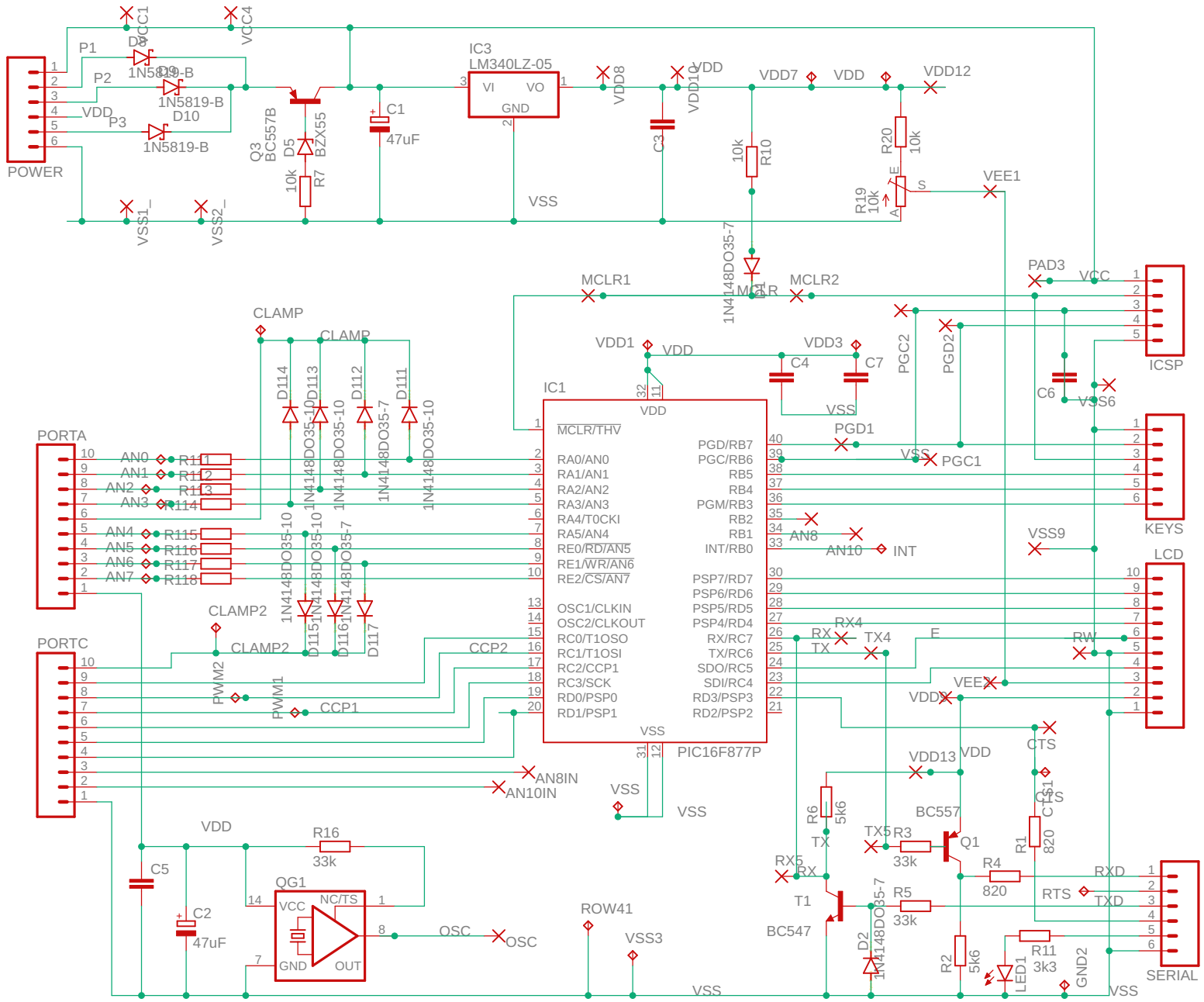

10/09/2021 12:24 C:\Users\Jeremy\Documents\EAGLE\projects\PICDEV\picdev_41r.sch (Sheet: 1/1)