Three Axis CNC Machine Assembly Instructions

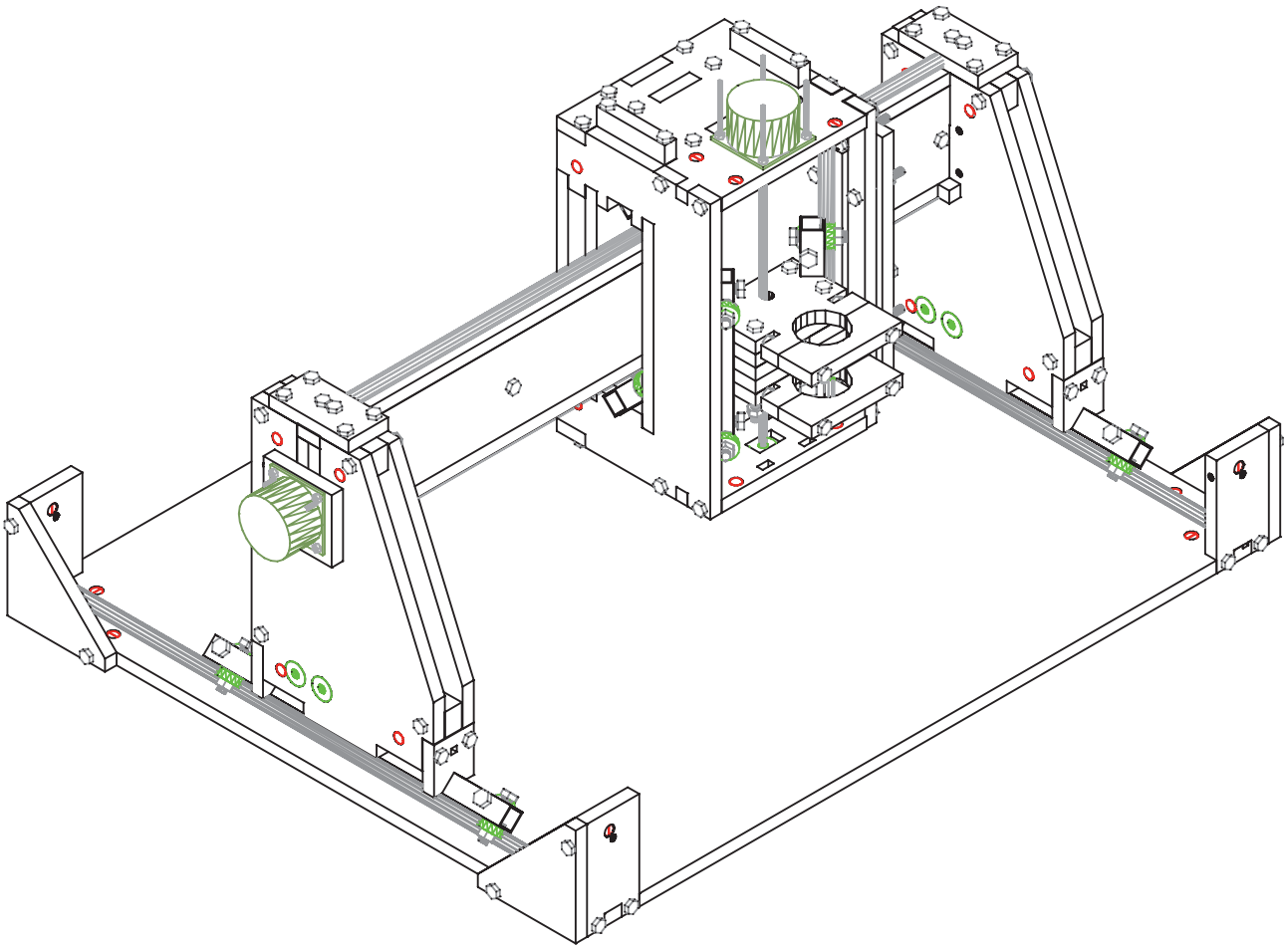

1.

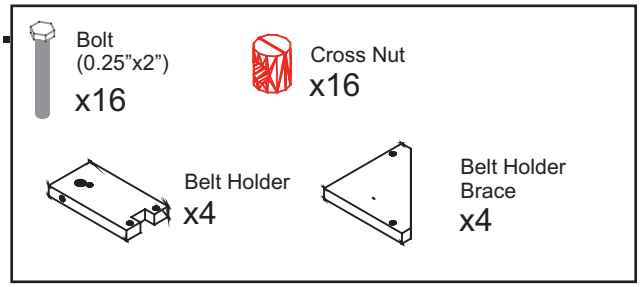
Bolt
(0.25”x2”)
x16
Cross Nut
x16
Belt Holder
x4
Belt Holder
Brace
x4

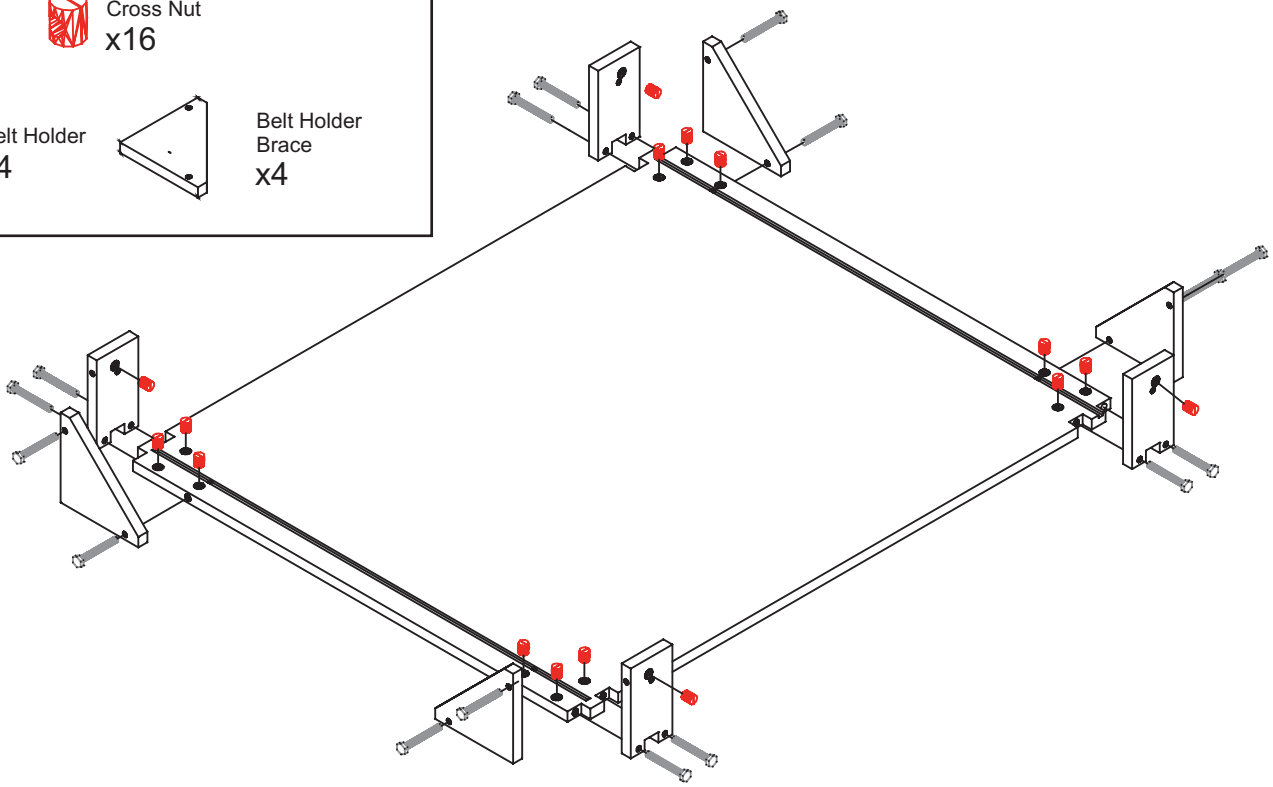

2.

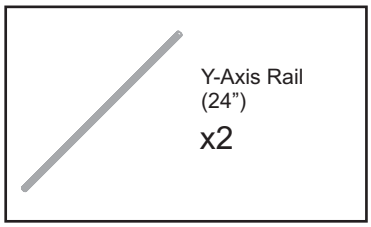
Y-Axis Rail
(24”)
x2

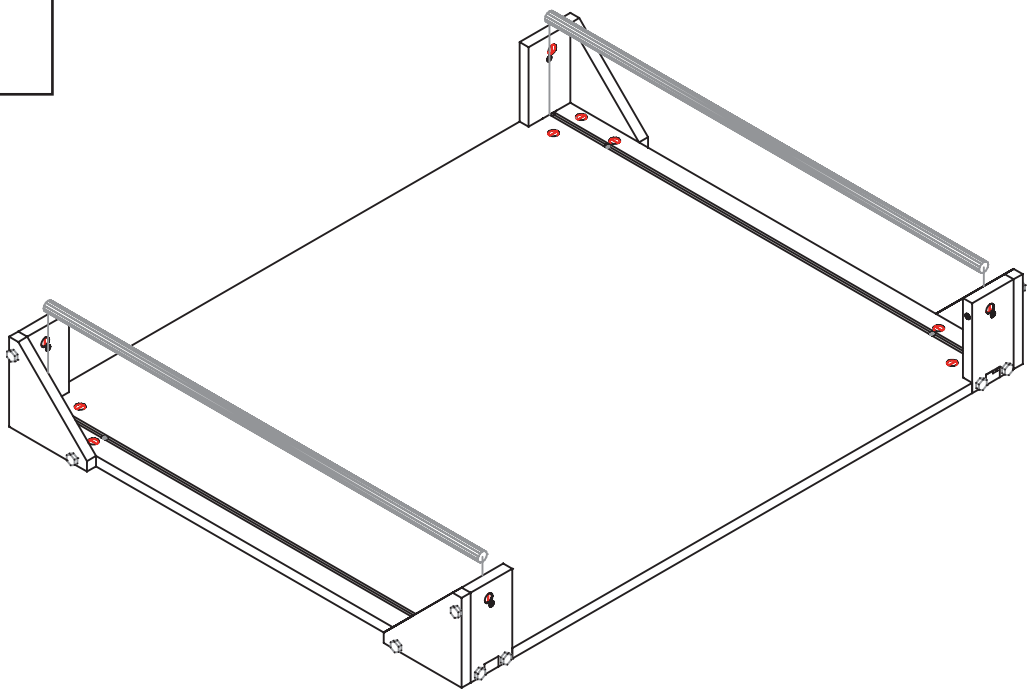

3.

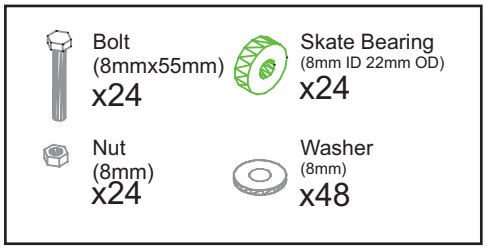

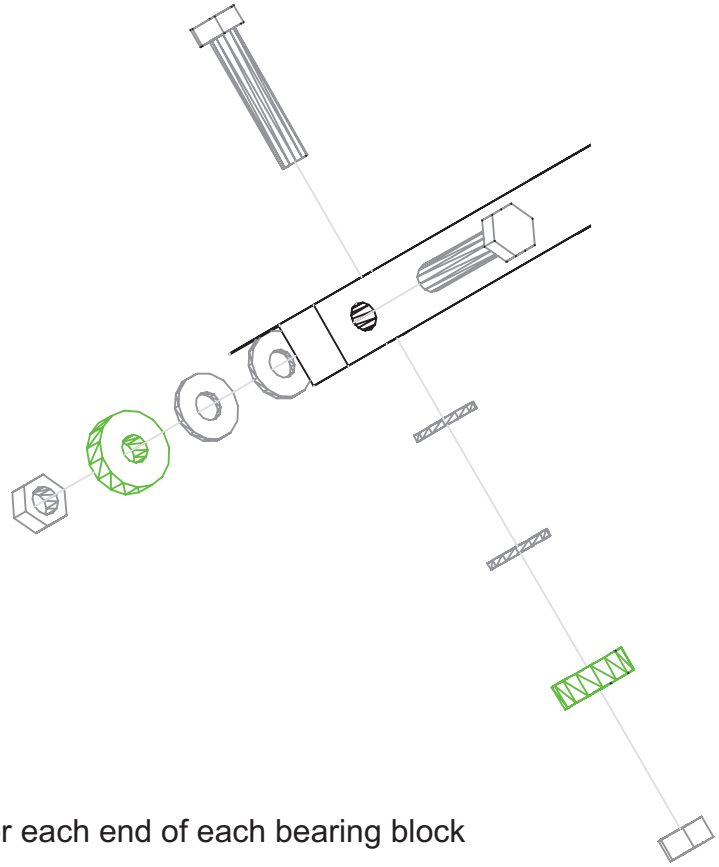

Note: Repeat this step 12 times once for each end of each bearing block

4.

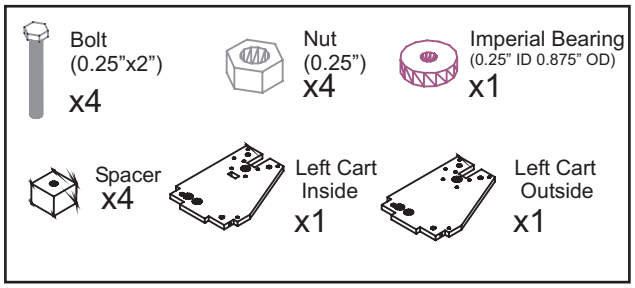

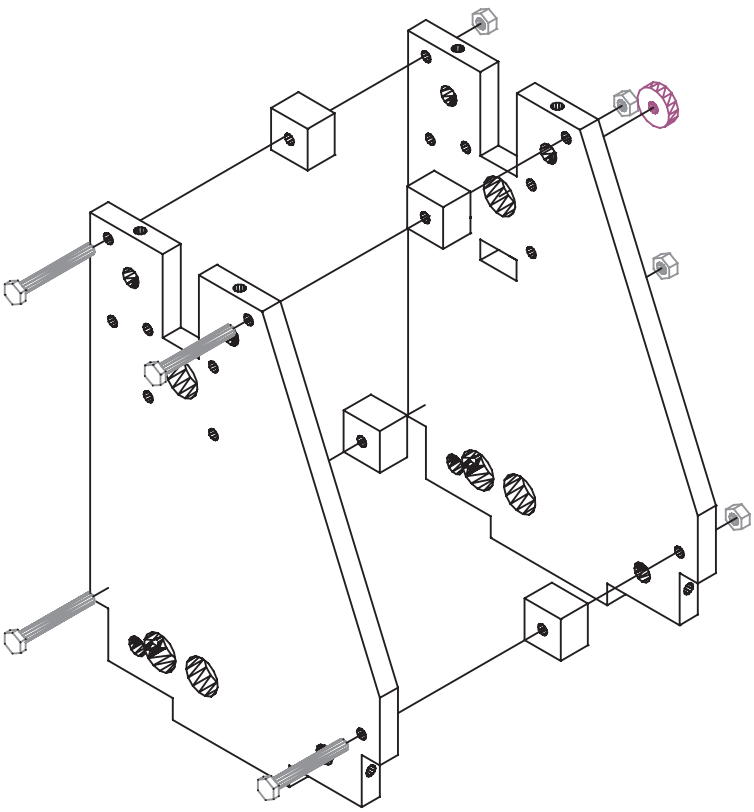

5.

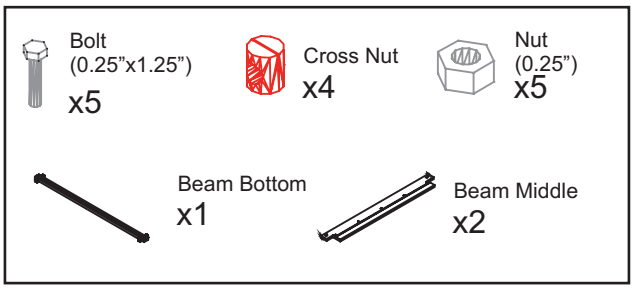
Bolt
(0.25”x1.25”)
x5
Cross Nut
x4
Nut
(0.25”)
x5
Beam Bottom
x1
Beam Middle
x2

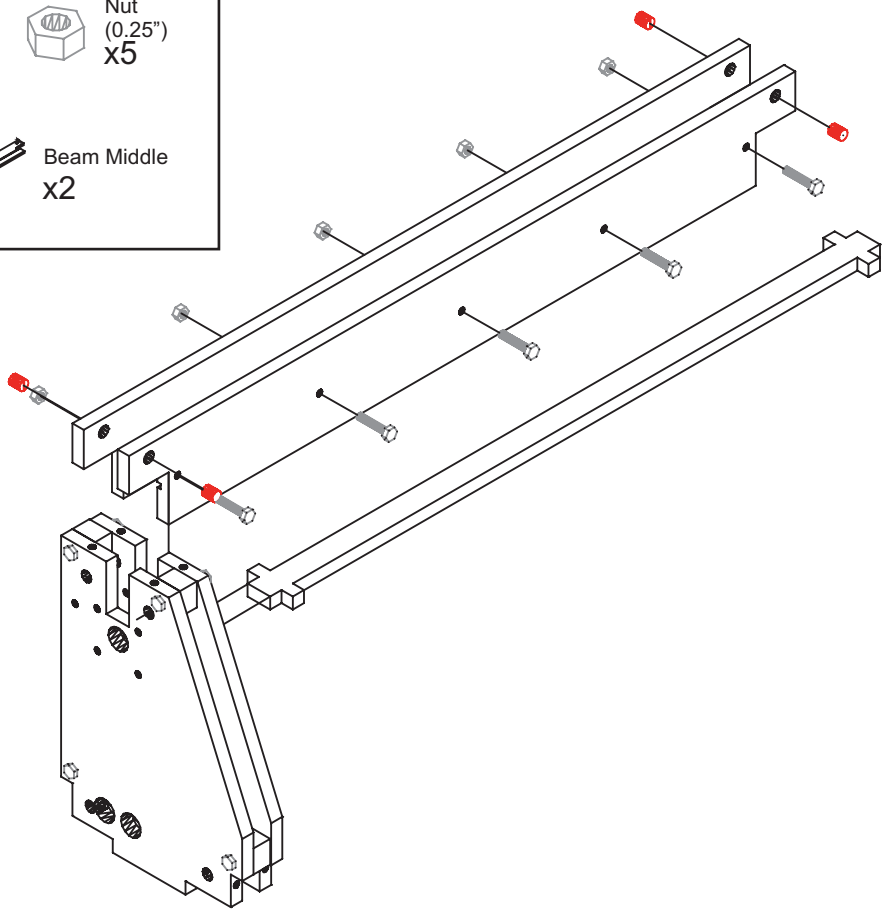

6.

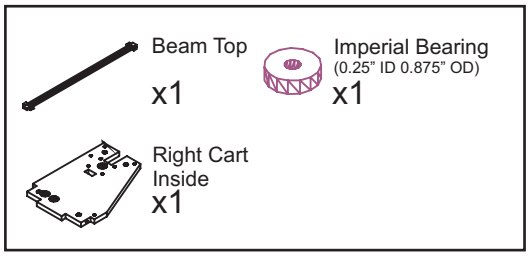
Beam Top
x1
Imperial Bearing
(0.25” ID 0.875” OD)
x1
Right Cart
Inside
x1

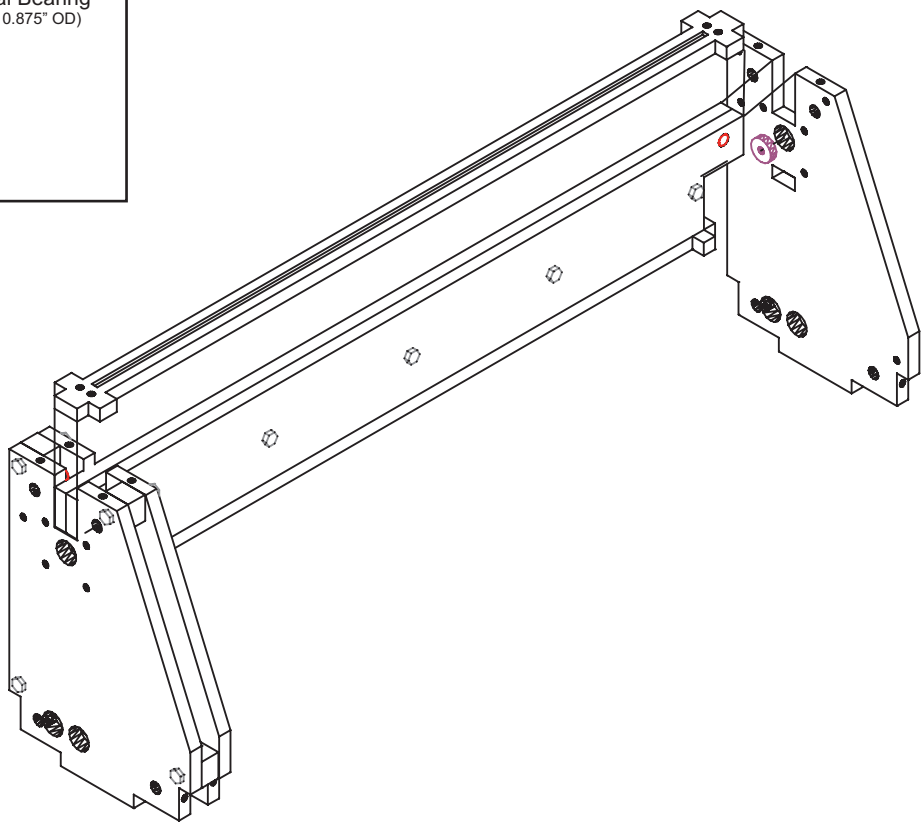

7.

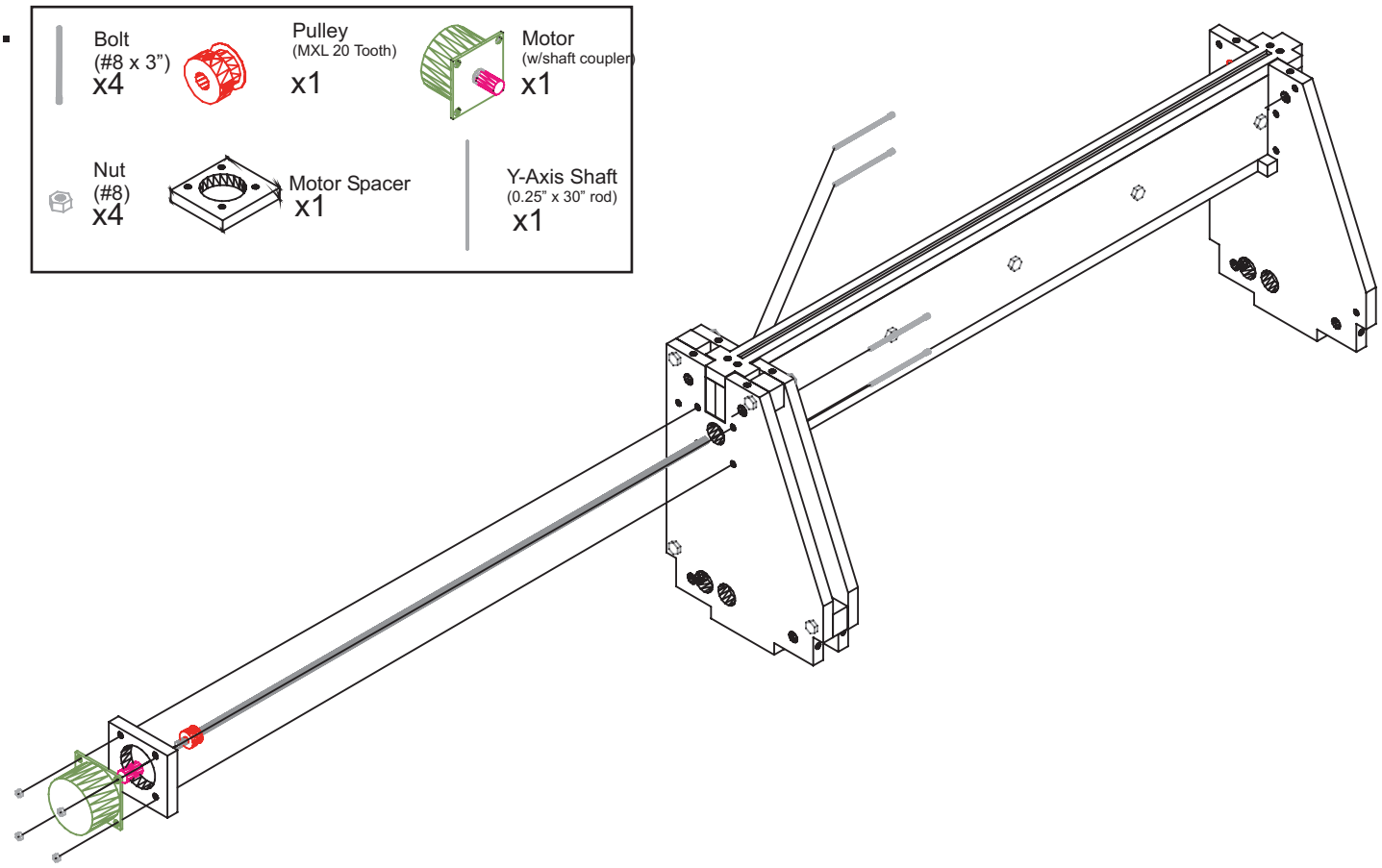
Bolt
(#8 x 3")
x4
Pulley
(MXL 20 Tooth)
x1
Motor
(w/shaft coupler)
x1
Nut
(#8)
x4
Motor Spacer
x1
Y-Axis Shaft
(0.25" x 30" rod)
x1

8.

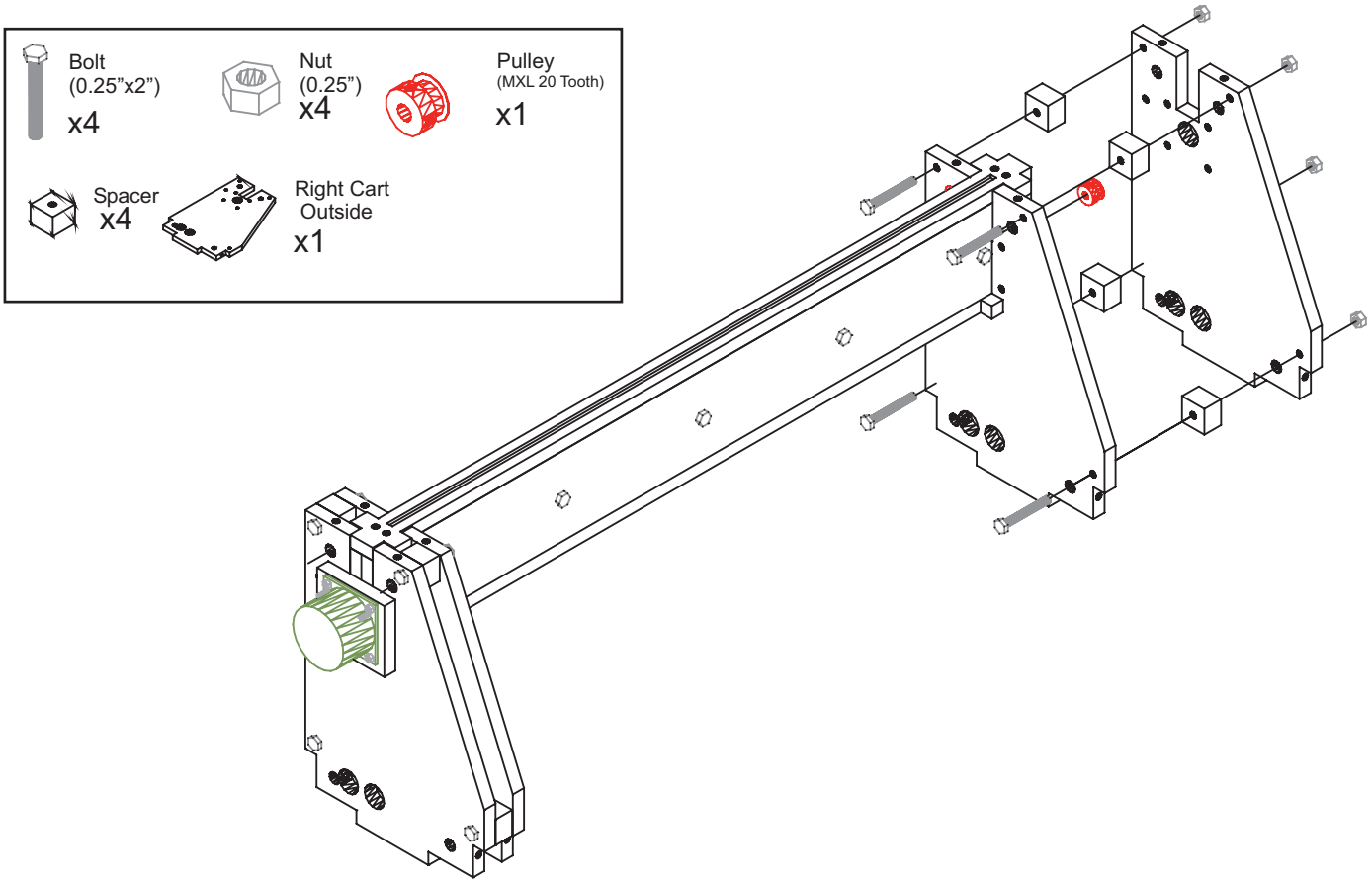
Bolt
(0.25"x2")
x4
Nut
(0.25")
x4
Pulley
(MXL 20 Tooth)
x1
Spacer
x4
Right Cart
Outside
x1

9.

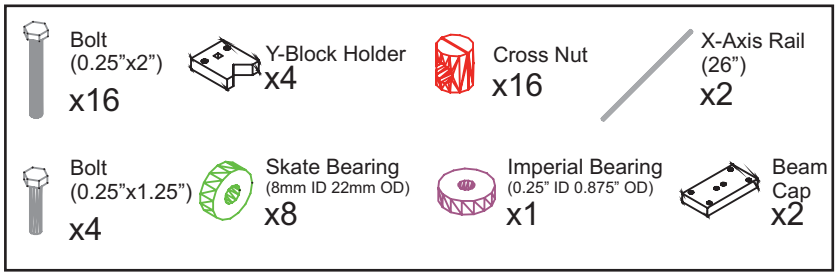
Bolt
(0.25"x2")
x16
Y-Block Holder
x4
Cross Nut
x16
X-Axis Rail
(26")
x2
Bolt
(0.25"x1.25")
x4
Skate Bearing
(8mm ID 22mm OD)
x8
Imperial Bearing
(0.25" ID 0.875" OD)
x1
Beam
Cap
x2

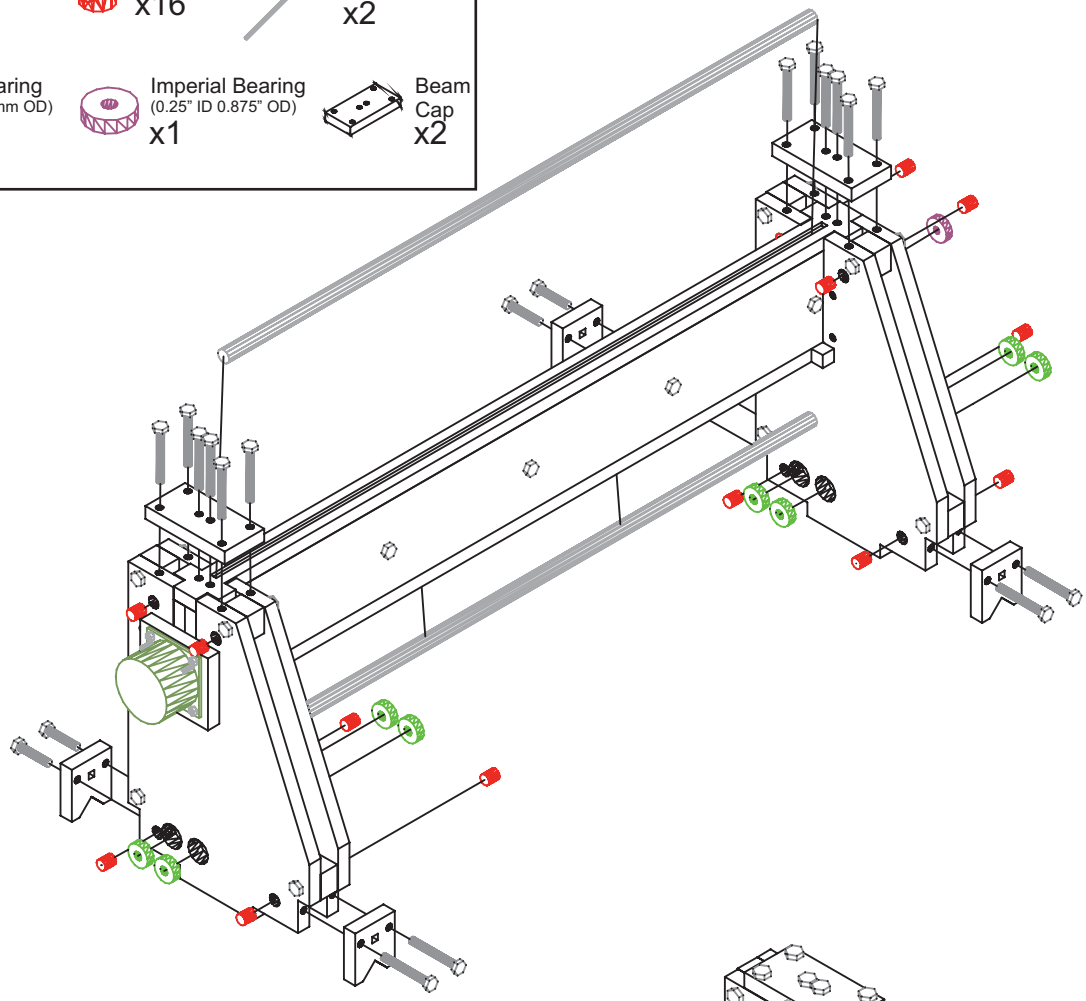

10.

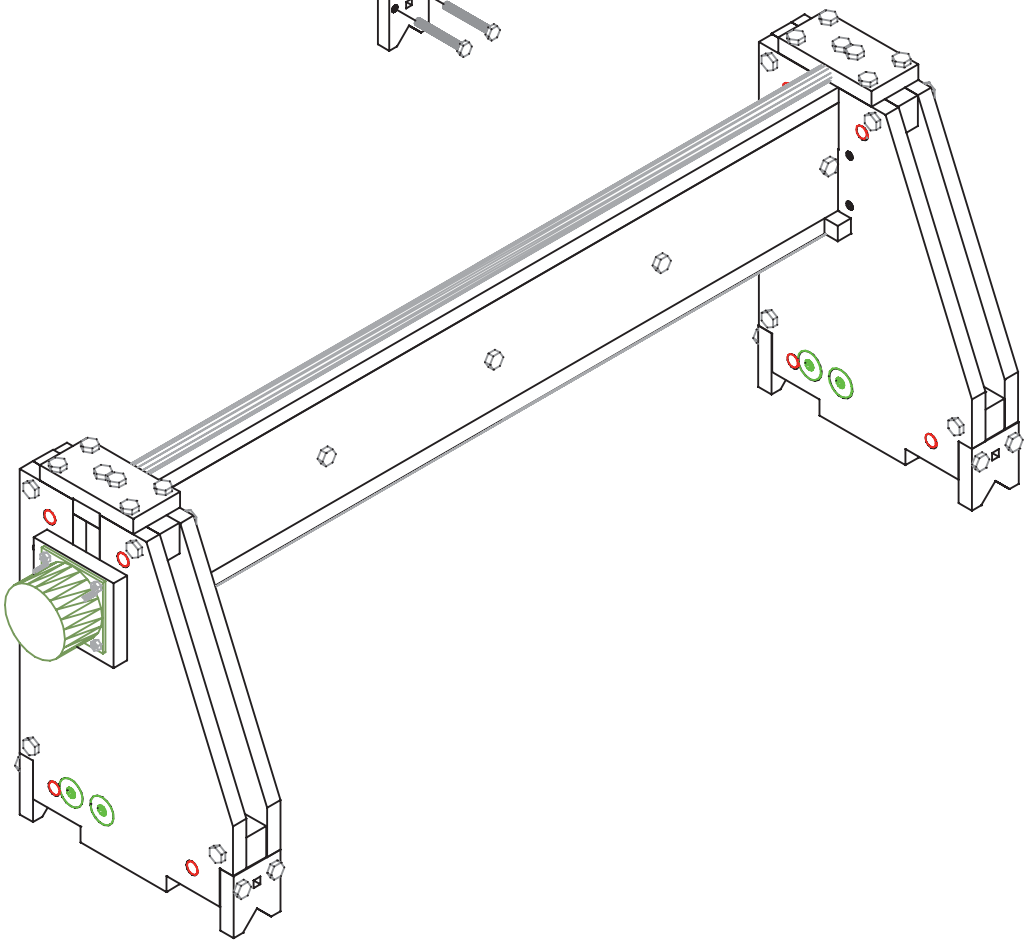

11.

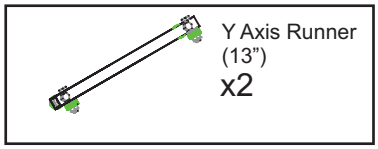

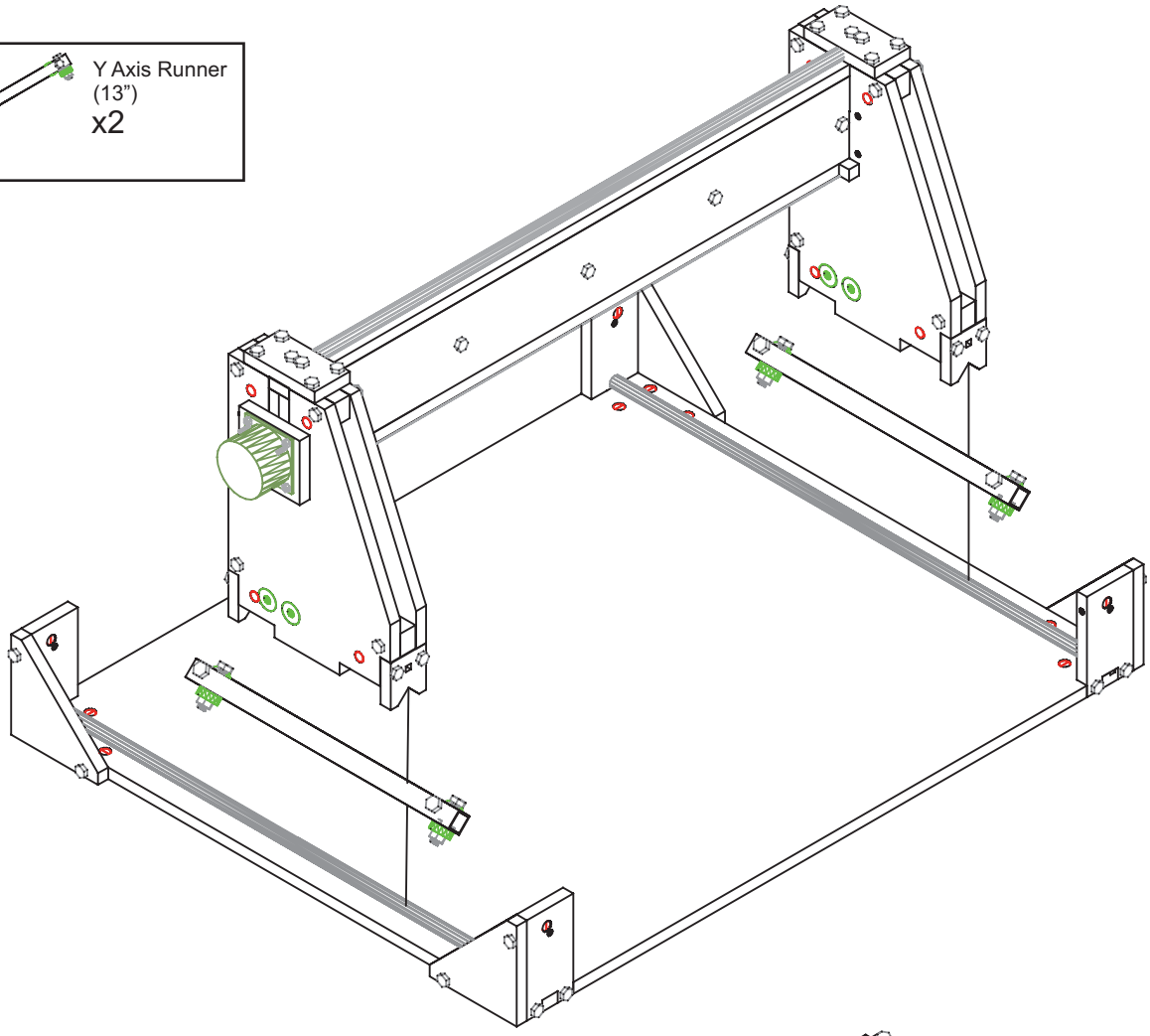

12.

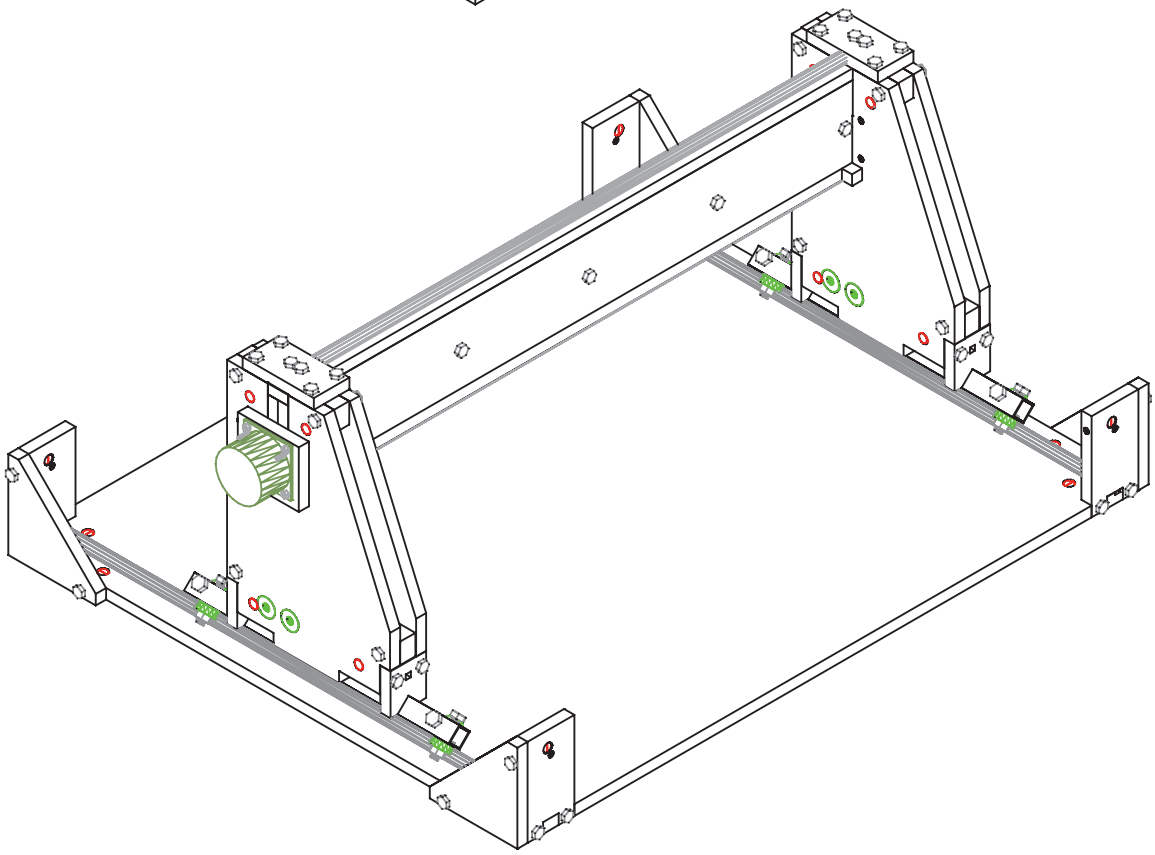

13.

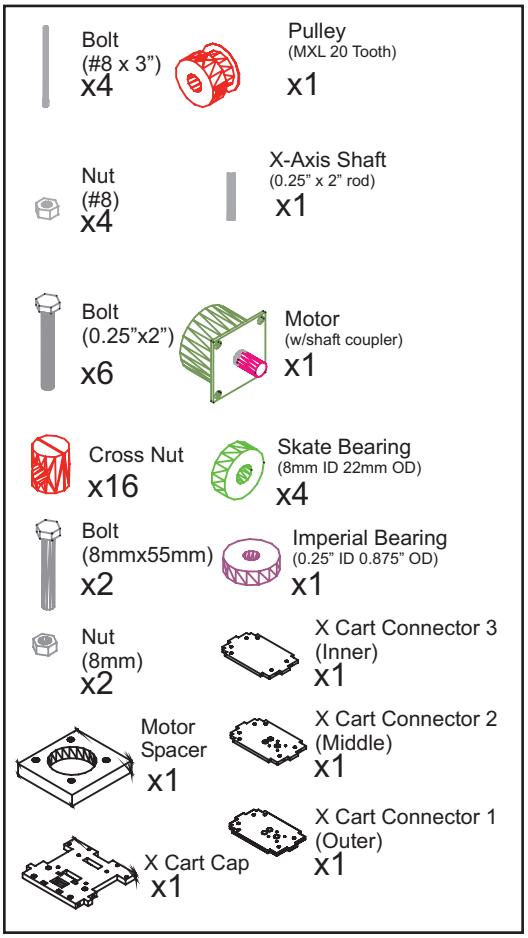
Bolt
(#8 x 3")
x4
Pulley
(MXL 20 Tooth)
x1
Nut
(#8)
x4
X-Axis Shaft
(0.25" x 2" rod)
x1
Bolt
(0.25"x2")
x6
Motor
(w/shaft coupler)
x1
Cross Nut
x16
Skate Bearing
(8mm ID 22mm OD)
x4
Bolt
(8mmx55mm)
x2
Imperial Bearing
(0.25" ID 0.875" OD)
x1
Nut
(8mm)
x2
X Cart Connector 3
(Inner)
x1
Motor
Spacer
x1
X Cart Connector 2
(Middle)
x1
X Cart Connector 1
(Outer)
x1
X Cart Cap
x1

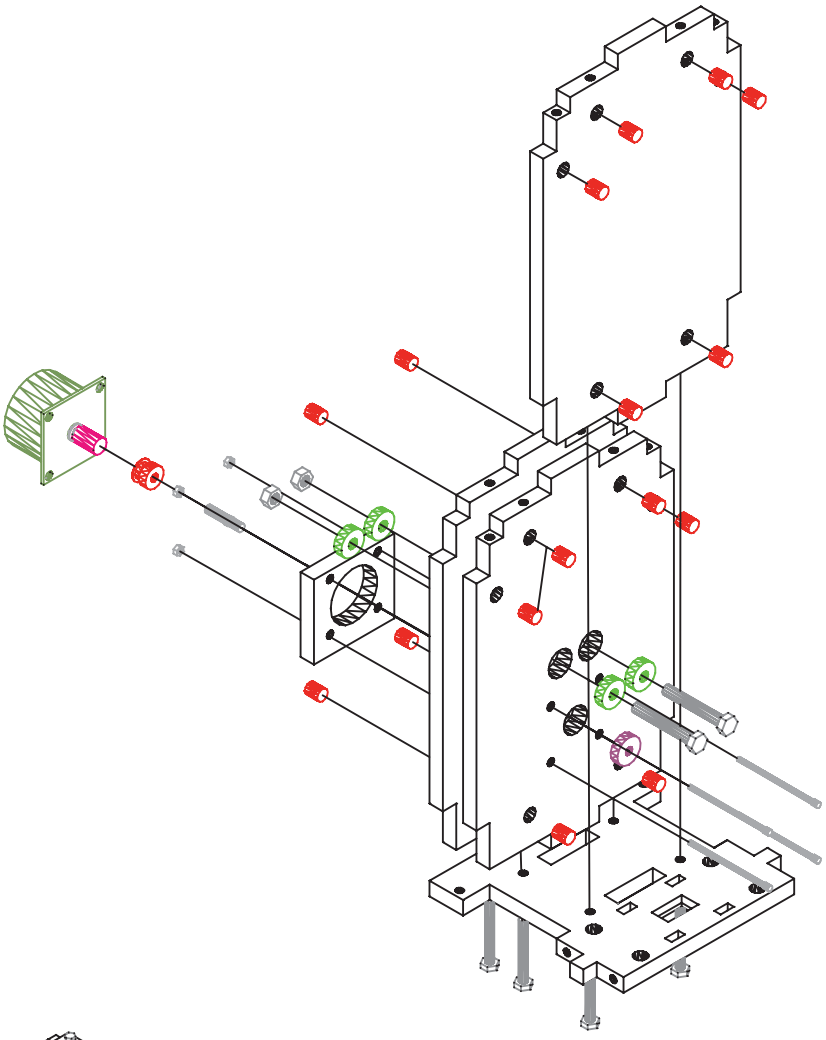

14.

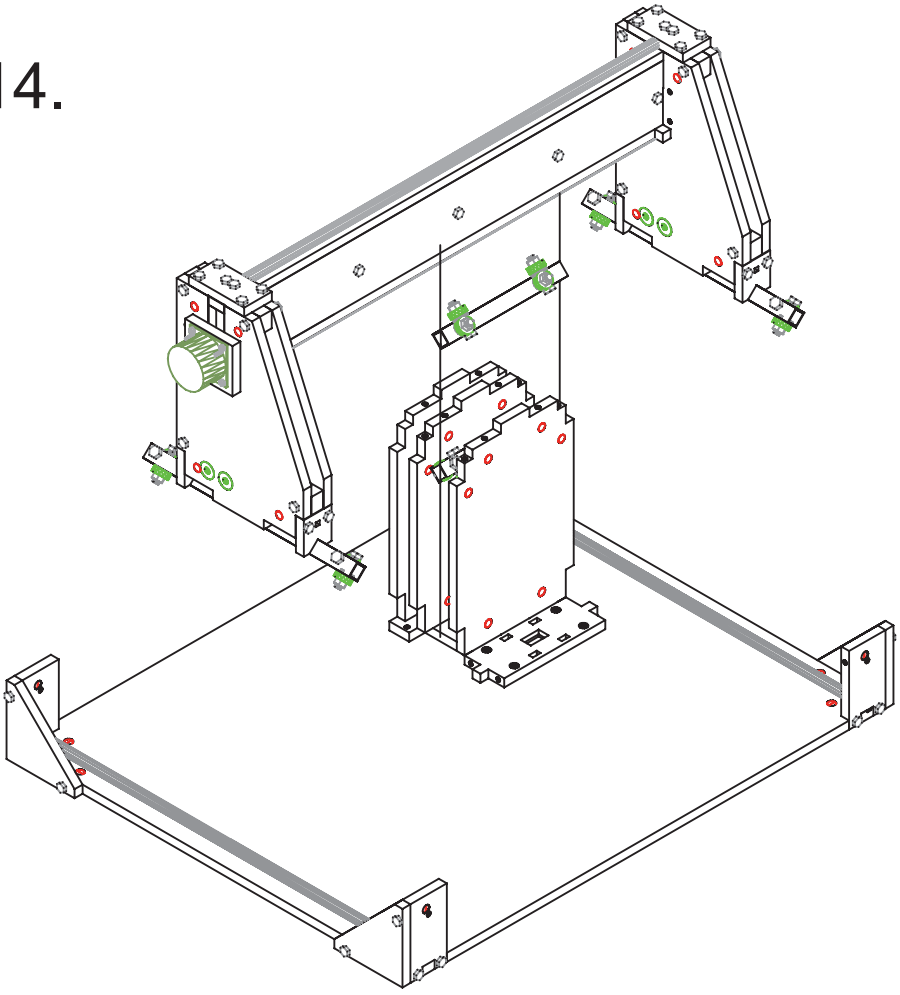

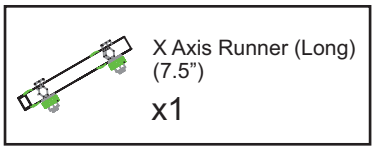
X Axis Runner (Long)
(7.5")
x1

15.

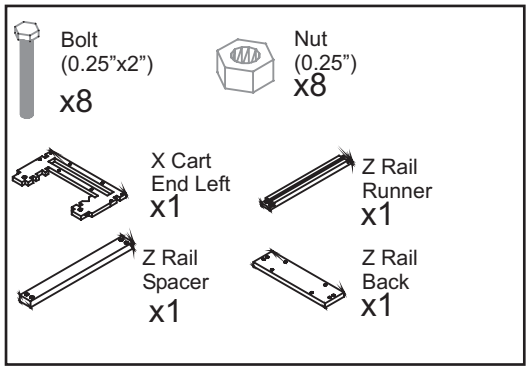

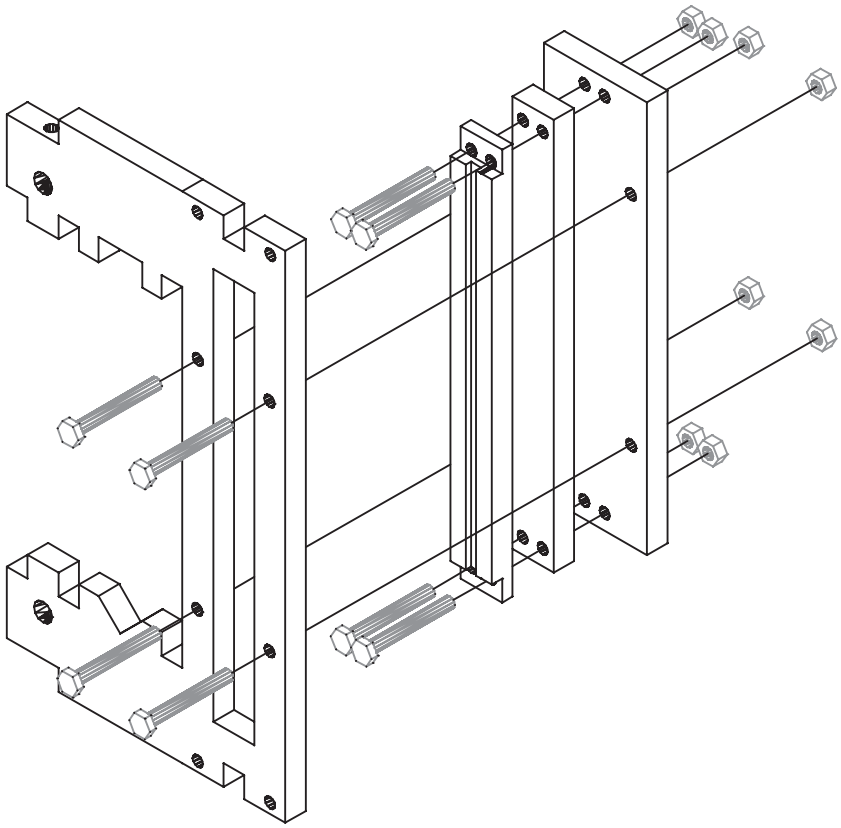

16.

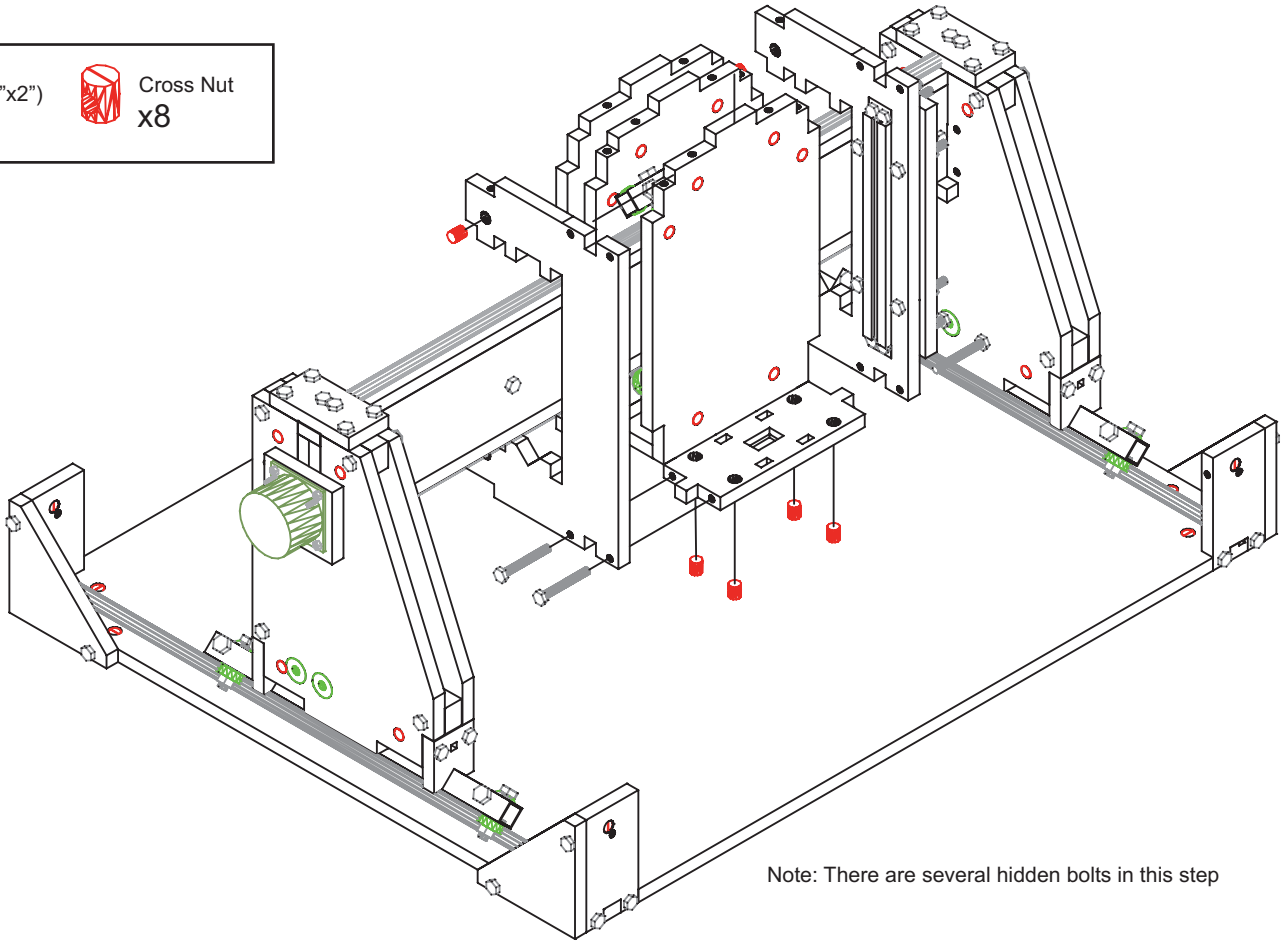

Note: There are several hidden bolts in this step

17.

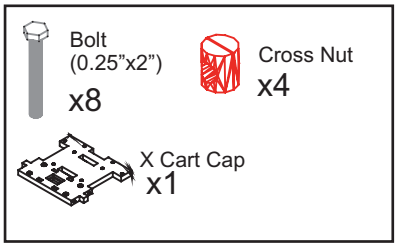
Bolt
(0.25”x2”)
x8
Cross Nut
x4
X Cart Cap
x1

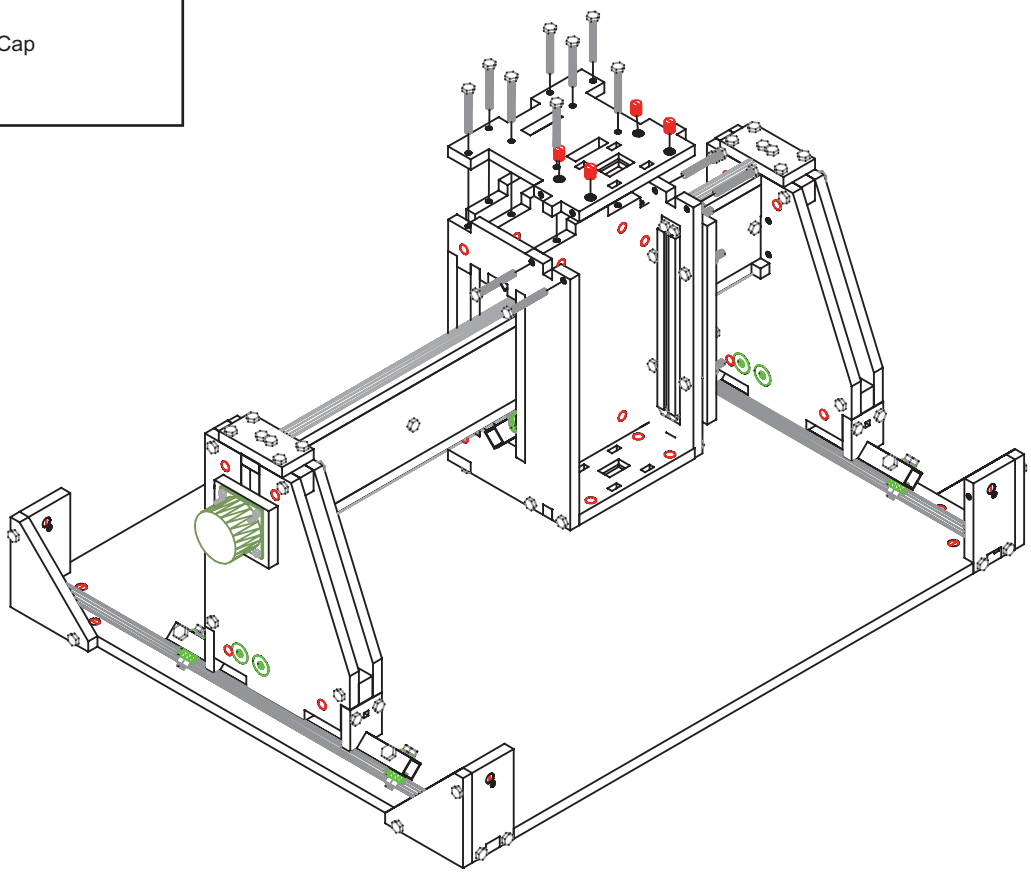

18.

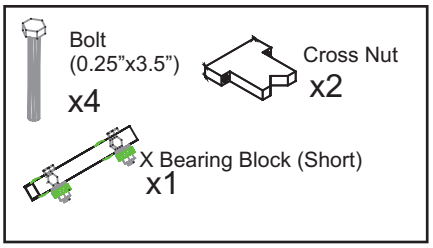
Bolt
(0.25”x3.5”)
x4
Cross Nut
x2
X Bearing Block (Short)
x1

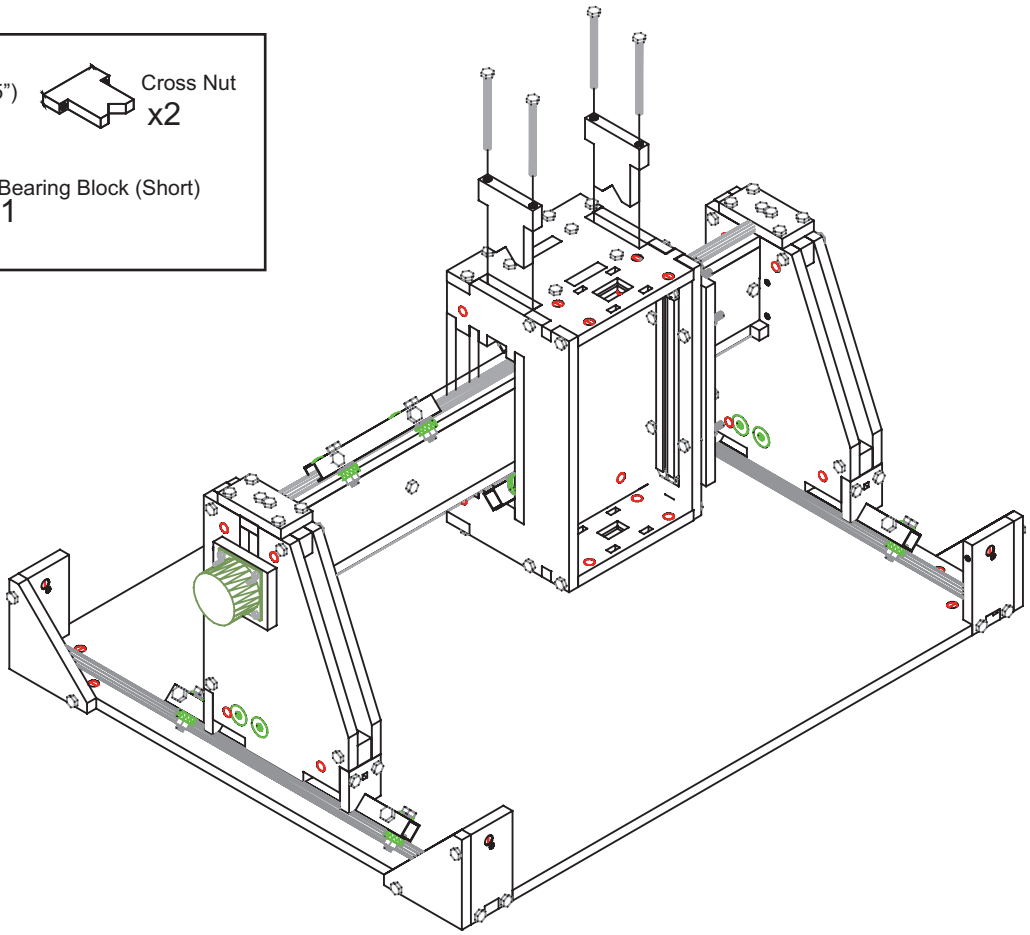

19.

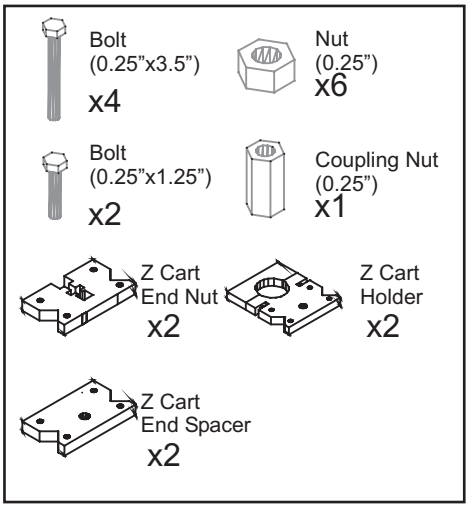
Bolt
(0.25”x3.5”)
x4
Nut
(0.25”)
x6
Bolt
(0.25”x1.25”)
x2
Coupling Nut
(0.25”)
x1
Z Cart
End Nut
x2
Z Cart
Holder
x2
Z Cart
End Spacer
x2

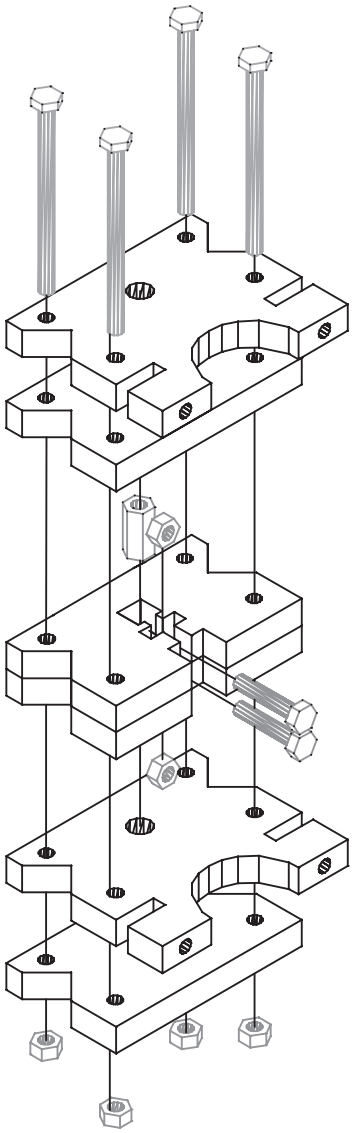

20.

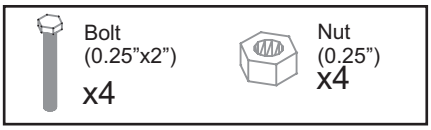
Bolt
(0.25”x2”)
x4
Nut
(0.25”)
x4

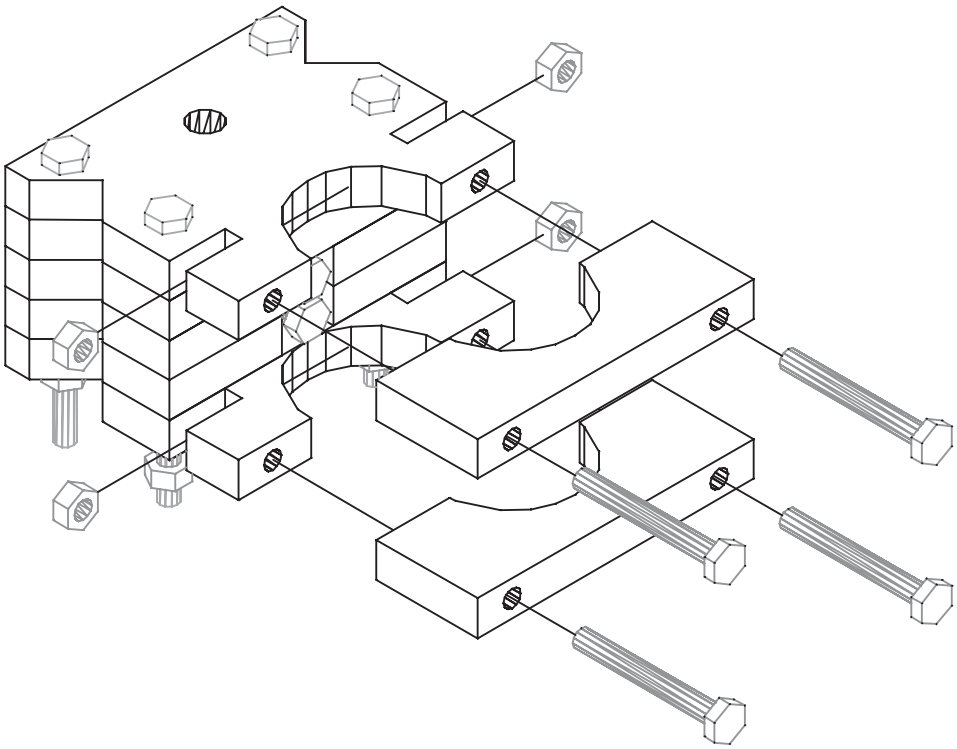

21.

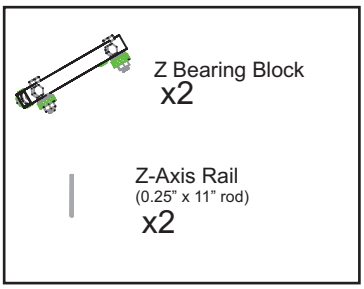
Z Bearing Block
x2
Z-Axis Rail
(0.25" x 11" rod)
x2

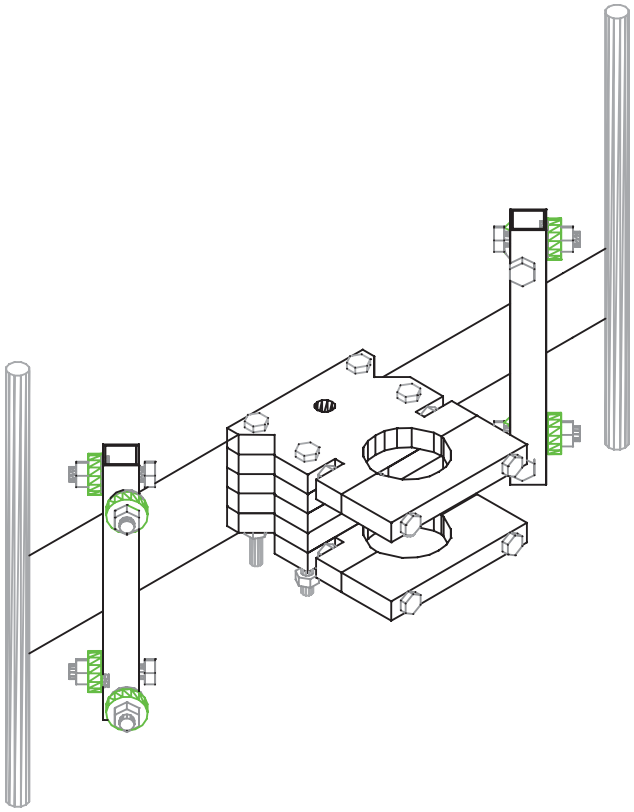

22.

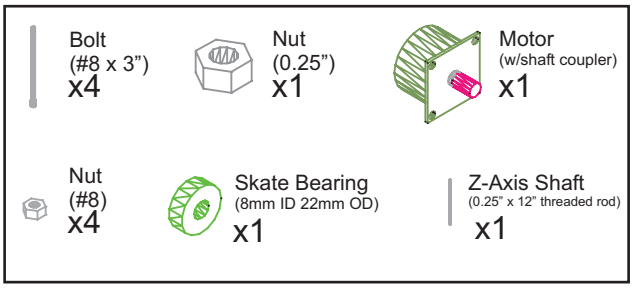
Bolt
(#8 x 3")
x4
Nut
(0.25")
x1
Motor
(w/shaft coupler)
x1
Nut
(#8)
x4
Skate Bearing
(8mm ID 22mm OD)
x1
Z-Axis Shaft
(0.25" x 12" threaded rod)
x1

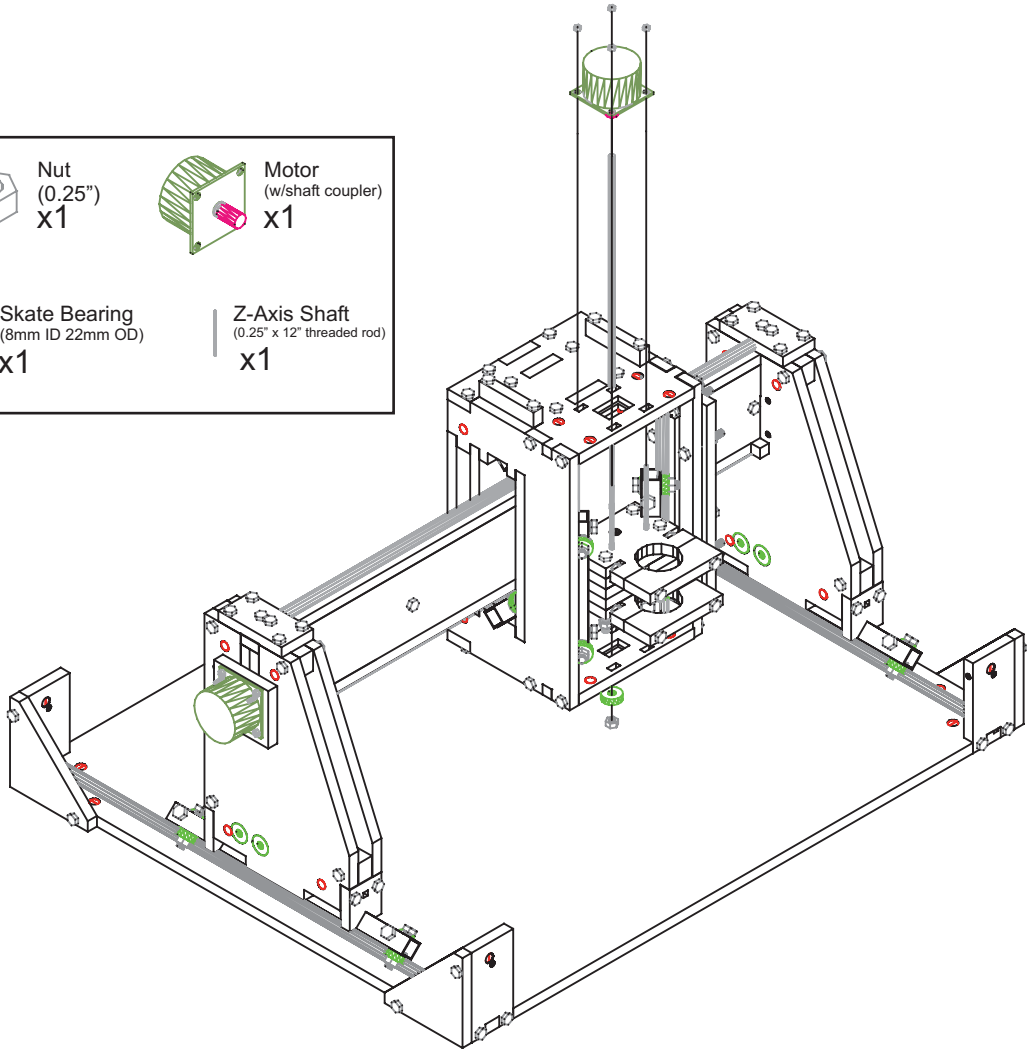

23.

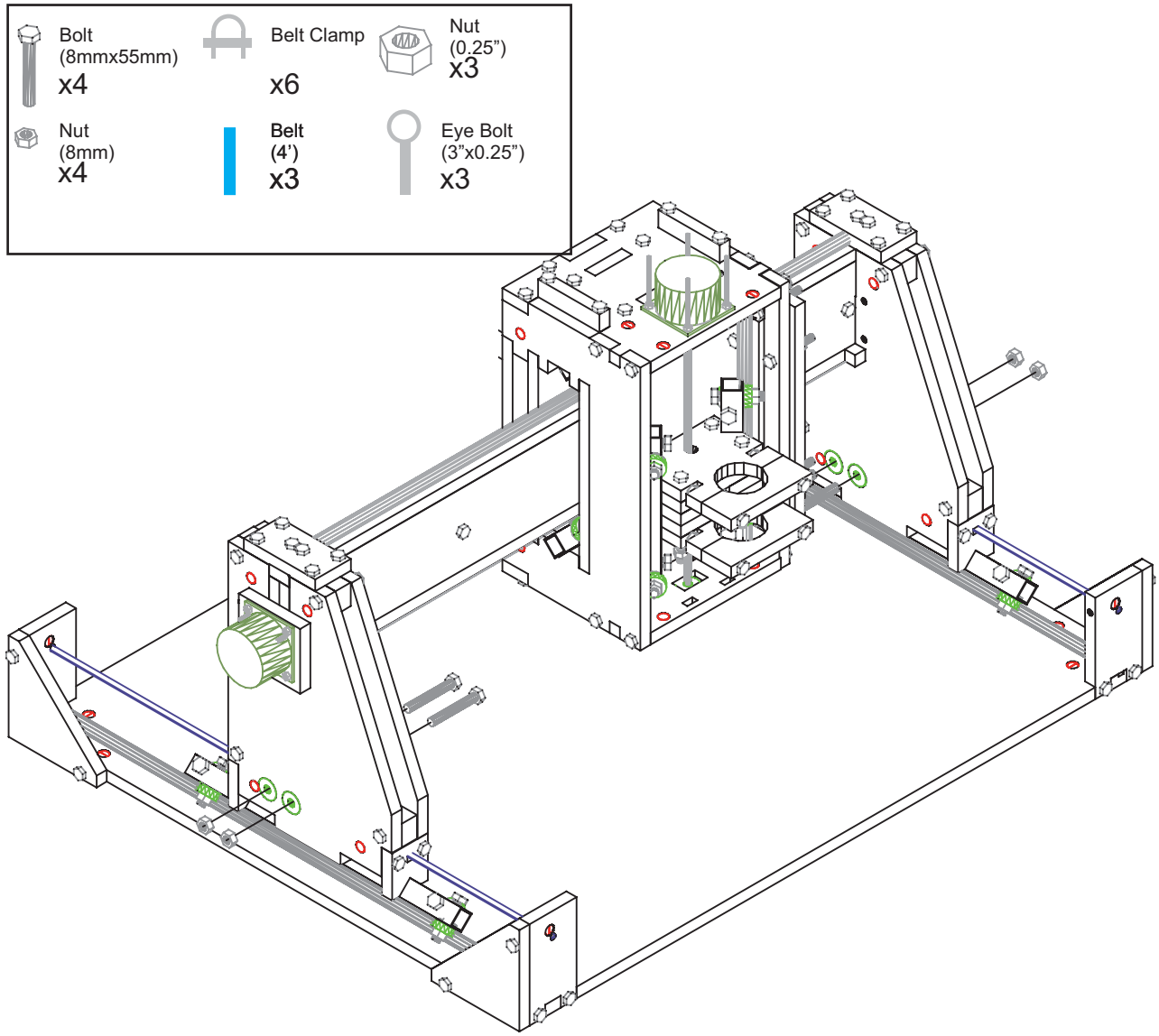

Note: Drawing the belt threading step exceeds my AutoCAD abilities therefore I shall end with a rather wordy explanation

1. Attach belt clamp to the end of each of the three lengths of belt

(For the Y Axis) (x 2)
2. thread belt through the hole in the front belt holder
3. thread the belt through the gap in the front Y-block holder
4. thread the belt under the front shaft of the bearing'd bolt
5. run the belt up and over the pulley attached to the Y-axis drive shaft
6. run the belt down and around the back bearing'd bolt
7. thread the belt through the gap in the back Y-block holder
8. Loop the belt through an eye bolt and clamp it with a belt clamp
9. put the eye-bolt through the hole in the back belt holder and attach a nut
10. Tighten the nut until the belt is taught

(For the X-Axis)
11. Use a similar threading path for the X-axis except start by running the belt through the holes in the cart just behind the Y-axis motor